METRICA
METRology Institutional CAtalog

ISTITUTO NAZIONALE DI RICERCA METROLOGICA
Repository Istituzionale

Comparison of a Planar Thin-Film Thermal AC Voltage Standard up to 1 MHz

This is the author's accepted version of the contribution published as:

Original
Comparison of a Planar Thin-Film Thermal AC Voltage Standard up to 1 MHz / Kampik, M.; Grzenik, M.; Lippert, T.; Trinchera, B.. - In: IEEE TRANSACTIONS ON INSTRUMENTATION AND MEASUREMENT. - ISSN 0018-9456. - 66:(2017), pp. 1379-1384. [10.1109/TIM.2017.2652238]

Availability:
This version is available at: 11696/65570 since: 2021-02-16T15:22:12Z

Publisher:
IEEE Transactions on Instrumentation and Measurement

Published
DOI:10.1109/TIM.2017.2652238

Terms of use:

This article is made available under terms and conditions as specified in the corresponding bibliographic description in the repository

Publisher copyright
IEEE
© 20XX IEEE. Personal use of this material is permitted. Permission from IEEE must be obtained for all other uses, in any current or future media, including reprinting/republishing this material for advertising or promotional purposes, creating new collective works, for resale or redistribution to servers or lists, or reuse of any copyrighted component of this work in other works

(Article begins on next page)

26 April 2024

Comparison of a Planar Thin-Film Thermal AC Voltage Standard up to 1 MHz

Marian Kampik, Michał Grzenik, Torsten Lippert and Bruno Trinchera

***Abstract* - The paper presents results of a trilateral comparison with a travelling AC voltage standard comprised of a PTB/IPHT planar thin-film thermal converter. The AC-DC voltage transfer difference of the standard was measured at 1 V and at selected frequencies from 20 Hz to 1 MHz against primary thermal AC voltage standards at SUT, INRiM and Trescal.**

***Index Terms* - measurement standards, thermal converter, AC-DC transfer, AC-DC transfer difference, key comparison**

I. Introduction

DESPITE the dynamic progress in the development of quantum AC voltage standards, many National Measurement Institutes (NMI) still make use of AC-DC voltage transfer standards based on thermal voltage converters (TVC) for the realization of the unit of AC voltage up to 1 MHz. The international comparisons of standard TVCs are crucial for checking their accuracy, detection of unavoidable systematic errors and ensuring compatibility of worldwide alternating voltage measurements.

This article is an extended version of [1], organized as follows: In section II the motivation for this new comparison is given. Section III describes the participants, their reference standards and AC-DC transfer measurement systems. In section IV we describe the travelling standard. Section V contains the results of the comparison. The final conclusions are given in Section VI.

II. Motivation For The New Comparison

The following considerations served as motivation for performing a new AC-DC voltage transfer standards comparison:

1. The last official comparison of standard TVCs in the frequency range up to 1 MHz, was performed among European NMIs in 1994 - 1996 [2], i.e. 20 years ago. A more recent comparison for frequencies up to 1 MHz was performed in Asia and Australia in 2004 - 2005 [3], i.e. 11 years ago. No other more recent comparison in this frequency range is known to the authors.

2. During years from 2011 to 2014 the AC-DC Transfer Laboratory at SUT was organized. The AC-DC transfer difference of its primary AC standard was calculated independently of other NMIs by means of several techniques in the frequency range from 10 Hz to 1 MHz. The estimated uncertainty of the SUT AC standard is comparable to the best AC voltage standards available, and more than an order of magnitude lower than the uncertainty of the Polish AC voltage standard maintained at GUM [4].

For the reasons mentioned above a new comparison of AC-DC voltage standards was conducted.

This paragraph of the first footnote will contain the date on which you submitted your paper for review.

M. Kampik is with Silesian University of Technology, ul. Akademicka 10, 44-100 Gliwice, Poland (e-mail: marian.kampik@polsl.pl).

M. Grzenik is with Silesian University of Technology, ul. Akademicka 10, 44-100 Gliwice, Poland (e-mail: michal.grzenik@polsl.pl).

Torsten Lippert is with TRESCAL, Mads Clausens Vej 12, 8600 Silkeborg, Denmark (e-mail: torsten.lippert@trescal.com).

Bruno Trinchera is with Istituto Nazionale di Ricerca Metrologica, Str. delle Cacce 91, 10135 Torino, Italy (e-mail: b.trinchera@inrim.it).

III. Traveling Standard

All participants measured the AC-DC transfer difference of the SUT traveling standard. A selected planar multijunction thermal converter (PMJTC) of PTB/IPHT design with nominal input voltage U_N = 1.5 V, with 180 Ω heater resistance and with a nominal output EMF of 100 mV was used as the traveling standard. The traveling standard is equipped with an N-type input connector and an UHF-Twin type output connector. The output of the PMJTC is shunted with a 2.2 µF ceramic surface-mount capacitor. The capacitor is soldered to the available pads on the PMJTC ceramic substrate providing thermal symmetry. Additionally, to reduce the coupling between the heater wires and the output, the wires between the PMJTC output and the UHF-Twin connector are twisted together.

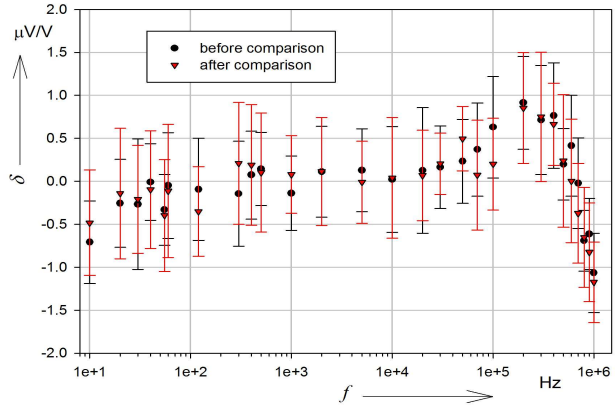

Fig. 1. AC-DC transfer differences of the SUT traveling standard compared with another SUT standard before and after the comparison. The error bars represent the expanded uncertainty (k=2).

TABLE I
UNCERTAINTY OF THE AC-DC VOLTAGE TRANSFER DIFFERENCE MEASUREMENTS AT SUT

Contribution to total uncertainty (μV/V)	Standard uncertainty (μV/V) at U = 1 V and at frequency:											
	20 Hz	40 Hz	1 kHz	10 kHz	20 kHz	30 kHz	50 kHz	80 kHz	100 kHz	300 kHz	500 kHz	1 MHz
Reference standard	0.6	0.6	0.5	0.4	0.4	0.8	0.9	0.95	1	1.5	2	2
Standard deviation	0.2	0.2	0.1	0.2	0.2	0.2	0.2	0.2	0.2	0.2	0.2	0.2
Exponent n	0.01	0.01	0.01	0.01	0.01	0.01	0.01	0.01	0.01	0.01	0.01	0.01
Influence of nanovoltmeters	0.75	0.75	0.75	0.75	0.75	0.75	0.75	0.75	0.75	0.75	0.75	0.75
Connectors and leakages	0.1	0.1	0.1	0.3	0.4	0.7	0.7	0.8	0.9	0.9	1.3	2
Combined standard uncertainty	1.0	1.0	0.9	0.9	1.0	1.3	1.4	1.5	1.6	1.9	2.5	2.9
Expanded uncertainty (k = 2)	**2.0**	**2.0**	**1.8**	**1.8**	**1.9**	**2.6**	**2.8**	**3.0**	**3.1**	**3.8**	**5.0**	**5.9**

The stability of the AC-DC transfer difference of the travelling standard was confirmed by comparison with another SUT AC voltage standard both before and after the measurements at INRiM and Trescal. The result is shown in Fig.1.

IV. PARTICIPANTS

The comparison was performed between SUT, Poland, INRiM, Italy and Trescal, Denmark. The travelling standard was provided by SUT, which is neither an NMI nor Designated Institute (DI). A short description of the primary AC voltage standards of the participants is presented below:

A. Silesian University of Technology (Poland)

The SUT AC-DC comparator is located in an electromagnetically shielded chamber. The ambient temperature and humidity inside the chamber is stabilized to be within (23±0.2)°C and (65±10)%RH, respectively. The two-channel measurement system shown in Fig. 1 is controlled by a personal computer with remote access. The operator of the system can remotely monitor the progress of the measurements without entering the measurement chamber. The operator's presence in the chamber is necessary only to reconfigure the measurement setup.

The AC-DC transfer difference of the primary AC Standard of the Silesian University of Technology is based on a set of thermal voltage converters from three different manufacturers. Most of them are equipped with PMJTC developed at PTB and manufactured by Leibniz-Institut für Photonische Technologien in Jena (Germany) [5].

The nominal input voltage for these TVCs ranges from 0.5 V to 1000 V. Their AC-DC transfer differences are calculated using several methods. In the 10 Hz to 40 Hz frequency range the AC-DC transfer difference is measured using the method similar to the one presented in [6]. In the frequency range from 40 Hz to 10 kHz the AC-DC transfer difference is determined using a Fast Reversed DC Source (FRDC) [7,8]. In the 10 kHz to 1 MHz frequency range the

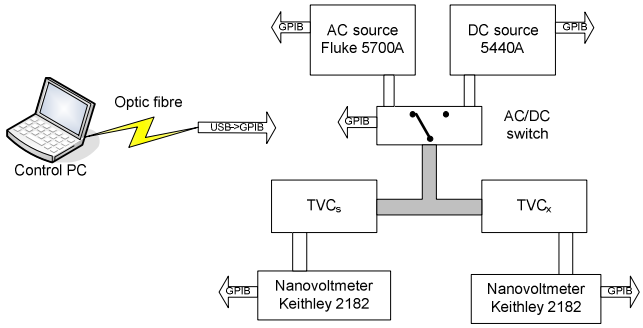

Fig. 2. Simplified measurement setup used at SUT.

SUT standard is based on two coaxial TVCs, each consisting of a 5 mA single junction thermal converter and a series thin-wire resistor. Their AC-DC transfer differences was calculated using a complex mathematical model for these TVCs [9,10]. The uncertainty budgets of the calculated AC-DC transfer differences include uncertainty components due to the material constants as well as the geometrical dimensions of these standards. A presentation of the detailed uncertainty budgets of the SUT standards is beyond the scope of this paper and may be found in [10]. The combined standard uncertainty and the expanded uncertainty values given in Table I are rounded up to two significant digits after calculation of the uncertainties.

The uncertainty budget for the measurement of the traveling standard is presented in Table I. It includes the influence of the reference standard (i.e. uncertainty of the AC-DC transfer difference of the calculable TVC developed at SUT), noise and nonlinearity of the DC nanovoltmeters, the influence of connector impedances and leakages, uncertainties of the estimation of the power coefficients (exponents) n of both compared TVCs and dispersion of measurements, expressed as the Type A uncertainty. The more detailed description of the uncertainty components may be found in [11].

TABLE II
UNCERTAINTY OF THE AC-DC VOLTAGE TRANSFER DIFFERENCE MEASUREMENTS AT INRIM

Contribution to total uncertainty (μV/V)	Standard uncertainty (μV/V) at U = 1 V and at frequency:											
	20 Hz	40 Hz	1 kHz	10 kHz	20 kHz	30 kHz	50 kHz	80 kHz	100 kHz	300 kHz	500 kHz	1 MHz
u($\underline{\delta}_{ref}$) Calibrated PMJTC against primary standard at 1V	0.8	0.5	0.4	0.4	0.4	0.4	0.4	0.8	1.1	3.1	4.2	9.5
u(δ_A): Standard deviation of the mean of 15 measurements	0.08	0.08	0.08	0.08	0.08	0.08	0.08	0.08	0.08	0.08	0.08	0.08
u(δ_R): Repeated measurements	0.1	0.1	0.1	0.1	0.1	0.1	0.1	0.1	0.1	0.1	0.1	0.1
u(δ_M): Measurement setup, connectors and bead leakages	0.1	0.1	0.1	0.1	0.1	0.1	0.1	0.3	0.4	0.7	1.5	2.0
u(δ_O): Optimization process	0.1	0.1	0.1	0.1	0.1	0.1	0.1	0.1	0.3	0.5	1	1.5
u(δ_D): Deviation from different determination	0.1	0.1	0.1	0.1	0.1	0.1	0.1	0.1	0.1	0.1	0.1	0.1
Combined standard uncertainty	0.89	0.56	0.49	0.49	0.49	0.49	0.49	0.90	1.25	3.33	4.84	10.0
Expanded uncertainty (k = 2)	**1.8**	**1.1**	**1.0**	**1.0**	**1.0**	**1.0**	**1.0**	**1.8**	**2.5**	**6.7**	**9.7**	**20**

B. Istituto Nazionale di Ricerca Metrologica- INRiM (Italy)

The Italian National Standard for AC voltage is realized and maintained at Istituto Nazionale di Ricerca Metrologica (INRiM), formerly Istituto Elettrotecnico Nazionale Galileo Ferraris (IEN).

INRiM uses a fully automated primary AC-DC measuring system (Fig. 3). Recently the system has been modernized. The major difference between the previous and present setups is a system for the measurement of the electromotive forces of thermal converters. Furthermore, an automatic convergence procedure has been implemented in order to align as closely as possible the output voltages of the AC and DC sources, and a fast coaxial switch is realized by use of vacuum relays. The inputs of the thermal converts are connected in parallel to the output of the coaxial switch by a custom-made N-type Tee. Output voltages of the TVCs are measured by nanovoltmeters, which are connected through a shielded low-pass band filter. All connections are made by shielded twisted pair cables. A shielding potential is connected to the common ground of the system. All instruments are connected to a PC through an optically isolated GPIB bus. The measurements were performed automatically in a temperature (23°C±1)°C and humidity (relative humidity ranging between 35%RH and 50%RH) controlled laboratory.

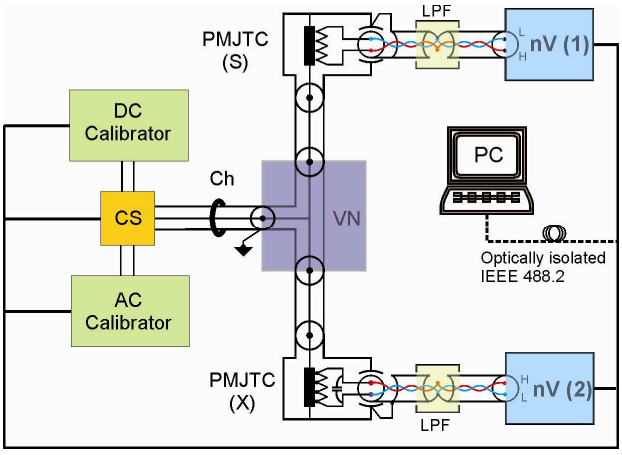

Fig. 3. Block diagram of the automatic AC-DC experimental setup at INRIM. CS coaxial switch realized with vacuum relays; Ch - coaxial choke; VN - voltage node for parallel connection of TVCs; LPF - low-pass band filter;;nV - digital nanovolmeter Keithely model 2182A, VAC and VDC voltage calibrator; PMJTC - planar multijunction thermal converters under comparison.

The currently used system is similar to the system which was used during the EURAMET.EM-K12 key comparison of AC-DC current transfer difference. The system was validated by measuring the voltage AC-DC transfer difference between a pair of PMJTCs in two ways: using the new fully automated measurement system and using the previous system based on a thermal EFM comparator [12]. The difference between the two measurement systems is included in the uncertainty budget as u(δ_M).

The AC voltage traceability chain begins with the SI DC-voltage representation given by the DC-Josephson effect, and its practical realization is based on a set of AC-DC transfer standards, i.e. Single Junction Thermal Converters (SJTC), Three-Dimensional Multi-Junction Thermal Converters (3D-MJTC) [13], planar multi-junction thermal converters and suitable ratio devices connected to the TVCs for the AC voltage scale implementation. The primary AC-DC laboratory of INRiM participated in the informal comparison by measuring the AC-DC voltage transfer difference of the thin-film PMJTC standard provided by SUT against two thin-film PMJTCs (Fig. 3), with rated input resistance of 180 Ω, which were calibrated directly against the primary AC-DC voltage transfer standards [15] at an input voltage of 1 V.

The uncertainty budget for the measurement of AC-DC transfer difference is presented in Table II. The main uncertainty contributions are:

- Uncertainty of the standard used during the comparison calibrated against the INRIM AC-DC primary standard at the nominal voltage of 1 V.
- Uncertainty of the comparison measurements which can be decomposed into the following components: u(δ_A), u(δ_R), u(δ_M), u(δ_O), u(δ_D) (Table II).

The uncertainty components are well described in the literature [11], and seem redundant to explain again in this paper.

C. TRESCAL (Denmark)

The Danish National Standard for AC voltage is realized and maintained at TRESCAL. Trescal uses a fully automated two-channel measuring system (Fig. 4). The reference standard (ref) and the thermal voltage converter to be measured (lab) are connected in parallel via a T-adaptor to an automated switch box. A DC source and an AC source are also connected to the switch box, so that DC voltage and AC voltage can be applied alternately to both thermal converters in a predetermined sequence. The output voltage of both thermal converters is measured independently by two nanovoltmeters.

All equipment is remotely controlled via computer-based GPIB. All measurements are performed under controlled environmental conditions: (23±1)°C and (45± 15)%RH.

A new software platform for the automated measurement process has been developed, allowing improved monitoring of any potential drift of the measured AC-DC transfer difference during the measurements. In addition, the determination of the power coefficients *n* of the TVCs has been improved by use of an automated program dedicated to this task.

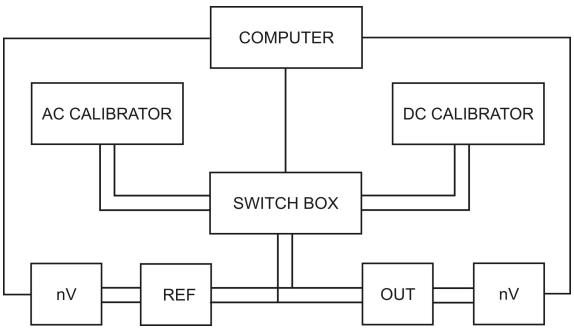

Fig. 4. Simplified measurement setup used at Trescal.

At Trescal the Danish national standard for AC-DC voltage transfer difference is maintained by use of three PTB type 3D-MJTCs with rated input impedances of 190 Ω [13,14,15]. The AC-DC voltage transfer difference of the traveling standard was compared with these primary standards in a fully automated two-channel setup. In the subsequent measurements a problem with the GPIB of one of the nanovoltmeters used in the comparison was detected, which by means of a second set of measurements after completion of the comparison revealed an influence on the results at high frequency of 0.5 μV/V at 100 kHz increasing to 5 μV/V at 1 MHz.

For the measured AC-DC transfer difference of the travelling standard, δ_{lab}, the resulting measurement uncertainties are listed in Table III. The standard uncertainties of the PTB-type 3D-MJTCs reference standards is estimated with contributions due to capacitance, inductance and dielectric loss of the heater and leads and skin effect, whereas thermoelectric effects have been determined once by use of fast reversed DC (FRDC) measurements. The standard deviation is a result of at least 12 repeated runs at each frequency and calculated as the standard deviation of the mean. The influence of the power coefficients relies on determination of the power coefficient of TVC (within ±0.5%). The nanovoltmeter contributions are based on its specification (typically noise: 1.5 - 10 nV) and measurements (linearity measured with a Josephson DC voltage system, typically 1 - 5 nV for a 50 μV/V interval around the measured output voltage). A variation of the length of the two arms from the centre of the T-adaptor, which is the reference plane of the measurements, can be up to 0.5 μV/V per mm at 1 MHz, but different T-adaptors cause differences in the measurement results up to 5 μV/V at 1 MHz, an effect which becomes significant above 50 kHz. The different results obtained with the three reference standards are also considered as an uncertainty component.

TABLE III
UNCERTAINTY OF THE AC-DC VOLTAGE TRANSFER DIFFERENCE MEASUREMENTS AT TRESCAL

Contribution to total uncertainty (μV/V)	Standard uncertainty (μV/V) at U = 1 V and at frequency:										
	20 Hz	40 Hz	1 kHz	10 kHz	20 kHz	30 kHz	50 kHz	100 kHz	300 kHz	500 kHz	1 MHz
Reference standard	0.9	0.5	0.3	0.3	0.3	0.3	0.3	1.0	3.5	4.0	12.5
Standard deviation	0.2	0.1	0.1	0.1	0.1	0.1	0.1	0.2	0.2	0.2	0.3
Power coefficients of TVC	0.02	0.01	0.01	0.01	0.01	0.01	0.01	0.05	0.1	0.2	0.3
Linearity nV-meters	0.1	0.1	0.1	0.1	0.1	0.1	0.1	0.1	0.1	0.1	0.1
Noise & thermal voltage. nV-meters	0.2	0.2	0.2	0.2	0.2	0.2	0.2	0.2	0.2	0.2	0.2
Resolution. nV-meters	0.2	0.2	0.2	0.2	0.2	0.2	0.2	0.2	0.2	0.2	0.2
T-adaptor	0.01	0.01	0.01	0.01	0.01	0.02	0.03	0.2	2.0	2.5	5.0
Different reference standards	0.5	0.3	0.2	0.2	0.2	0.2	0.2	0.6	0.8	1.0	2.0
Combined standard uncertainty	1.21	0.67	0.48	0.48	0.48	0.48	0.48	1.24	4.2	4.9	13.7
Expanded uncertainty (k = 2)	**2.5**	**1.4**	**1.0**	**1.0**	**1.0**	**1.0**	**1.0**	**2.5**	**9**	**10**	**28**

Other possible influence parameters such as frequency accuracy (100 μHz/Hz), harmonic distortion (below 0.5%), time constants and temperature coefficients of the thermal converters, with a proper choice of stabilization periods, are considered to be negligible. The resulting number of effective degrees of freedom exceeds 100 at all frequencies, so a coverage factor of k = 2 is used to determine the expanded measurement uncertainties.

V. RESULT OF COMPARISON

Each participant measured the AC-DC transfer difference $\delta_{\mathrm{lab},i}$ of the travelling AC voltage standard for selected frequencies. For each frequency, the deviation $\Delta(\delta) = \delta_{\mathrm{lab},i} - \delta_{\mathrm{ref}}$ from a reference value δ_{ref} was calculated, where [16]:

$$\delta_{\mathrm{ref}} = \sum \frac{\delta_{\mathrm{lab}i}}{u^2(\delta_{\mathrm{lab}i})} u^2(\delta_{\mathrm{ref}}). \quad (1)$$

$\delta_{\mathrm{lab}i}$ and $u(\delta_{\mathrm{lab}i})$ is the AC-DC transfer difference and its uncertainty, respectively, measured by the i-th participant and

$$\frac{1}{u^2(\delta_{\mathrm{ref}})} = \sum \frac{1}{u^2(\delta_{\mathrm{lab}i})}. \quad (2)$$

The result of comparison is shown in Fig.5. The error bars in Fig.5 represent the expanded uncertainty (k=2).

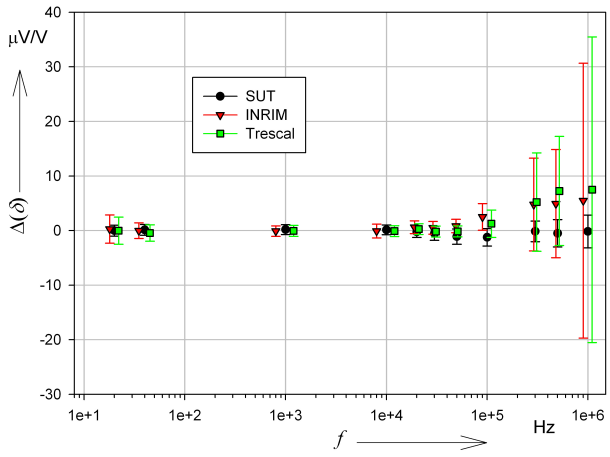

Fig. 5. Result of the trilateral interlaboratory comparison.

VI. CONCLUSION

The results obtained within the trilateral comparison of AC voltage standards show good consistency, especially in the 20 Hz - 100 kHz frequency range. Furthermore, the need to extend our calibration capabilities beyond 1 MHz range leads us to consider a further comparison in frequency range from 1 MHz to 10 MHz. Crystal quartz thin-film multijunction thermal converters have been purposed, but these are not yet available commercially, so the use of thin-film silicon and fused-silica based MJTCs alongside traditional SJTCs seems to be the more reasonable proposal.

REFERENCES

[1] M. Kampik, M. Grzenik, T. Lippert, B. Trinchera, "Trilateral comparison of a planar thin-film thermal AC voltage standard up to 1 MHz," *CPEM 2016 Digest*, Ottawa, Canada, Jul. 2016.

[2] M. Klonz, "CCE comparison of AC-DC voltage transfer standards at the lowest attainable level of uncertainty," IEEE Trans. Instrum. Meas., vol. 46, no. 2, pp. 342 – 346, April 1997.
[3] I. Budovsky et al., "APMP international comparison of AC-DC transfer standards at the lowest attainable level of uncertainty," *IEEE Trans. Instrum. Meas*., vol. 54, no. 2, pp. 795 – 798, April 2005.
[4] http://kcdb.bipm.org
[5] H. Laiz, M. Klonz, E. Kessler, M. Kampik, R. Lapuh, "Low-frequency AC-DC voltage transfer standards with new high sensitivity and low-power-coefficient thin-film multijunction thermal converters," *IEEE Trans. Instrum. Meas.*, vol. 52, no. 2, pp. 350-354, Apr. 2003.
[6] T. Funck et al., "Determination of the ac-dc voltage transfer difference of high-voltage transfer standards at low frequencies," *IEEE Trans. Instrum. Meas*., vol. 54, no. 2, pp. 807 – 809, April 2005.
[7] H. Sasaki et al., "Determination of the time constants of thermoelectric effects in thermal converters using a fast-reversed dc," *IEEE Trans. Instrum. Meas.*, vol. 46, pp. 377 – 381, Apr. 1997.
[8] M. Kampik, J. Tokarski, W. Barwinek, M. Kurczalski, "A fast-reversed DC voltage/current source to measure frequenc-independent AC-DC transfer difference of thermal voltage converters," *Measurement Automation Monitoring*, vol. 62, no.01, pp. 2-6, Jan. 2016.
[9] M. Kampik, M. Grzenik, "Calculable Thermal AC Voltage Standards for 10 kHz - 1 MHz Frequency Range," *CPEM 2016 Digest*, Ottawa, Canada, Jul. 2016.
[10] M. Grzenik, M. Kampik, "Calculable Thermal AC Voltage Standards for 10 kHz - 1 MHz Frequency Range," to be published in *IEEE Trans. Instrum. Meas.*
[11] M. Klonz, "CCEM-K6.a: key comparison of ac-dc voltage transfer standards at the lowest attainable level of uncertainty," *Metrologia*, 2002, 39, *Tech. Suppl.*, 01002.
[12] F. Cabiati et al., "High-precision thermal emf comparator for automatic ac-dc transfer measurements," *IEEE Trans. Instrum. Meas.*, vol. 32, no. 1, pp. 57 – 62, March 1983.
[13] M. Klonz, "AC-DC Voltage Transfer Difference of the PTB Multijunction Thermal Converter at 1 MHz," *CPEM '90 Digest, Conference on* , pp. 60 – 61, 11-14 June 1990.
[14] M. Klonz, "AC-DC Transfer Difference of the PTB Multijunction Thermal Converter in the Frequency Range from 10 Hz to 100 kHz," IEEE Trans. Instrum. Meas., vol. IM-36 no. 2, pp. 320 – 329, June 1987.
[15] U. Pogliano and G. C. Bosco, "Determination of the frequency dependence of the ac-dc voltage standard at IEN," *IEEE Trans. Instrum. Meas*., vol. 46, no. 2, pp. 373 – 376, April 1997.
[16] M.G. Cox, "The evaluation of key comparison data," *Metrologia*, 39, pp. 589 – 595, 2002.

Marian Kampik received the M.Sc., Ph.D. and Habilitate Doctorate (D.Sc.) degrees, all in electrical engineering, from Silesian University of Technology, Gliwice, Poland, in 1988, 1996, and 2010 respectively.

He has been with the Institute of Measurement Science, Electronics and Control, Faculty of Electrical Engineering, Silesian University of Technology since 1988, where he became a University Professor in 2010, and the Director of the Institute in 2012. From 1993 to 1995 he was a Visiting Scientist at the Physikalisch-Technische Bundesanstalt (PTB), Braunschweig, Germany. His current research interests include AC voltage and current standards, thermal converters, digital signal synthesis and impedance measurements.

Dr. Kampik received the Siemens Prize (team) in 2003, the Research Excellence Grant granted by the European Research Metrology Programme in 2013 and two scholarships granted by the German Academic Exchange Service (DAAD) in 1993-95 and 1999.

Michal Grzenik was born in Poland in 1986. He received the M.S. degree and Ph.D. degree from the Silesian University of Technology, In Gliwice Poland, in 2010 and 2015. He has been with the Institute of Electrical Measurements, Silesian University of Technology, since 2015. His research works are focused on AC voltage standards and thermal voltage converters

Torsten Lippert was born in Germany in 1965. He received his B.Sc. degree in chemistry and M.Sc. degree in physics from Aarhus University in Denmark in 1994 in the field of quantum field theory and high energy particle physics. In 1995 he joined the calibration company Trescal A/S in Silkeborg, Denmark. He has been involved with temperature, humidity and pressure measurements, but is mainly involved with research & development in the low frequency and RF & microwave areas. He is a participant of the Euramet subcommittees for Low Frequency, Power & Energy and RF & Microwaves.

.

Bruno Trinchera (1973) received the M.S. degree in physics from the University of Torino, and the Ph.D. degree in metrology from the Politecnico di Torino, in 2001 and 2007, respectively. Research toward the Ph.D. degree was conducted in the Istituto di Metrologia "Gustavo Colonnetti" (now merged in the Istituto Nazionale di Ricerca Metrologica (INRIM)) on precision radiation thermometry at low temperatures.
He joined the Istituto Nazionale di Ricerca Metrologica (INRiM), Torino, Italy, in 2005. His current research interests include precision measurements of ac quantities, ac/dc voltage and current transfer measurements and development and use of quantum voltage standards for primary ac voltage metrology and direct linking of sampled/synthesized voltage measurements to fundamental physical constants.