Freeform scanning on the internal involute waviness measurement standard

A. Piccato, A.Egidi, D. Corona, A.Balsamo

Freeform scanning on the internal involute waviness measurement standard

T.R. 17/2017 September 2017

I.N.RI.M. TECHNICAL REPORT

Abstract

PTB designed and manufactured an internal involute waviness scanning measurement standard (***SAFT 2w***). The device embodies an internal and an external involute profile both superposed with a certain waviness which enables to characterize the dynamic behavior of probing systems. The measurement standard is designed as a disc with two high accurate reference surfaces (a circle and a plane) to define the datum axis of the workpiece. A precise bore is used to define the x-axis. Both the internal and external involute profiles have been calibrated as unmodified gear profiles according to existing standards and guidelines (e.g. ISO 1328-1), i.e. for both profiles the total deviation $\mathbf{F}_a$, the form deviation $\mathbf{f}_{fa}$ and the slope deviation $\mathbf{f}_{Ha}$ have been calibrated. Moreover, a spectral analysis has been performed using FFT method. The three main components of the spectrum have been calibrated in terms of wavelength and amplitude.
INRIM has investigated the influence of scanning parameter such as 5 different scanning speeds within the range of the machine specification, 3 different workpiece orientations inside the measurement volume and 3 different stylus lengths. The measurement have been carried out on the CMM at INRIM by using the internal involute waviness measuring the calibrated standard ***SAFT 2w*** and a model for estimating the measuring uncertainty contribution has been derived from the measurement results. ***This work is related to the deliverable 5.2.3 of Drive Train Poject (ENG56).***

Il PTB ha progettato e costruito un campione envolvente (SAFT 2w) per la valtazione degli effetti introdotti dai parametri di scanning nelle misure a coordiante. Il dispositivo comprende un profilo di evolvente interna ed esterna, entrambe sovrapposte con una certa waviness (una lavorazione meccanica che riproduce un andamento ondoso sulla superficie del pezzo con determinate caratteristiche di lunghezza d'onda e ampiezza) che consente di caratterizzare il comportamento dinamico dei sistemi di scansione. Il campione di misura è progettato come un disco con due superfici di riferimento ad alta precisione (un cerchio e un piano) per definire l'asse di riferimento del pezzo. Un foro di precisione viene utilizzato per definire l'asse x. Entrambi i profili di evolvente sono stati tarati come profili di ruote dentate secondo gli standard e le linee guida esistenti (si veda ad esempio ISO 1328-1). Per entrambi i profili sono state tarate la deviazione totale $\mathbf{F}_\alpha$*, la deviazione modulo* $\mathbf{f}_{f\alpha}$ *e la deviazione della pendenza* $\mathbf{f}_{H\alpha}$*. Inoltre, è stata effettuata un'analisi spettrale usando il metodo FFT. Le tre componenti principali dello spettro sono state tarate (PTB) in termini di lunghezza d'onda e di ampiezza.*
L'INRIM ha analizzato l'influenza dei parametri di scansione, quali: 5 diverse velocità di scansione (da 2 mm / s a 24 mm / s), 3 diversi orientamenti del pezzo all'interno del volume di misura e 3 diverse lunghezze dello stilo (35 mm, 135 mm e 235 mm). Il risultato delle misure è stato analizzato per valutare, per entrambi i profili, le deviazioni $\mathbf{F}_\alpha$*,* $\mathbf{f}_{f\alpha}$ *and* $\mathbf{f}_{H\alpha}$*) secondo la ISO 1328-1: 2013 e l'influenza dovuta alle variabili di scansione.* ***Questo lavoro si colloca all'interno del Progetto DriveTrian (ENG56) come deliverable 5.2.3.***

Index

Introduction

Deliverable **5.2.3** (**WP 5 -** *Validation of measurement strategies and determination of achievable measurement uncertainty in industrial environment*, **Task 5.2 -** *Determination of the achievable measurement uncertainty*) refers to investigation of dynamic behaviour of probing systems due to scanning measurement at CMM of two standard involute profiles, both superposed with a certain waviness. The standard involutes (SAFT 2w) have been manufactured and calibrated according to existing standards and guidelines (e.g. ISO 1328-1) by PTB (see D2.1.1 and D2.1.2). In particular, for both profiles, the total deviation $\boldsymbol{F}_{\alpha}$, the form deviation $\boldsymbol{f}_{f\alpha}$ and the slope deviation $\boldsymbol{f}_{H\alpha}$ have been calibrated; moreover, a spectral analysis has been performed using FFT method and the three main components of the spectrum have been calibrated in terms of wavelength and amplitude. Result are documented in PTB calibration certificate ref. n. 5.3-2016-014 (D2.1.2)

INRIM investigated the influence of scanning parameter such as 5 different scanning speeds (from 2 mm/s to 24 mm/s), 3 different workpiece orientations inside the measurement \volume and 3 different stylus lengths (35 mm, 135 mm and 235 mm). Measurement result have been analysed in order to evaluate, for both profiles, the deviations ($\boldsymbol{F}_{\alpha}$, $\boldsymbol{f}_{f\alpha}$ and $\boldsymbol{f}_{H\alpha}$) according ISO 1328-1: 2013 and the influence due to the scanning measurement parameters on these result.

1. The measurement standard SAFT 2w

the standard SAFT 2w is a plate with a diameter of 290 mm and a thickness of 20 mm, with 2 polished references on the border (a circle and a plan) in order to determine the reference axis of the workpiece (Fig. 1 and Fig. 2). The standard embodies an internal and an external involute profile both superposed with a certain waviness. The profiles have been manufactured with a wire-cut EDM machine. The machining data points have been obtained by using the function described in Figure 3. The three waviness parameters, which were used, are presented in the Table 1.

Geometry parameters	
Outer diameter	290 mm
Face width	20 mm
Involute parameters: • Radius of base circle • Range of involute function inv(α) Int. involute: ---------- ext. Involute: ----------	 20 mm 0°- 270° 0°- 200°
Nominal wavelength and amplitude: • $\lambda_1; A_1$ ---------- • $\lambda_2; A_2$---------- • $\lambda_3; A_3$----------	 8 mm; 5 µm 2.5 mm; 3 µm 0.8 mm; 1 µm

Tab. 1: Waviness parameters

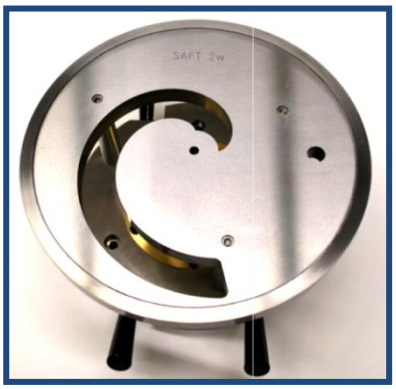

Fig.1 SAFT 2W Artefact

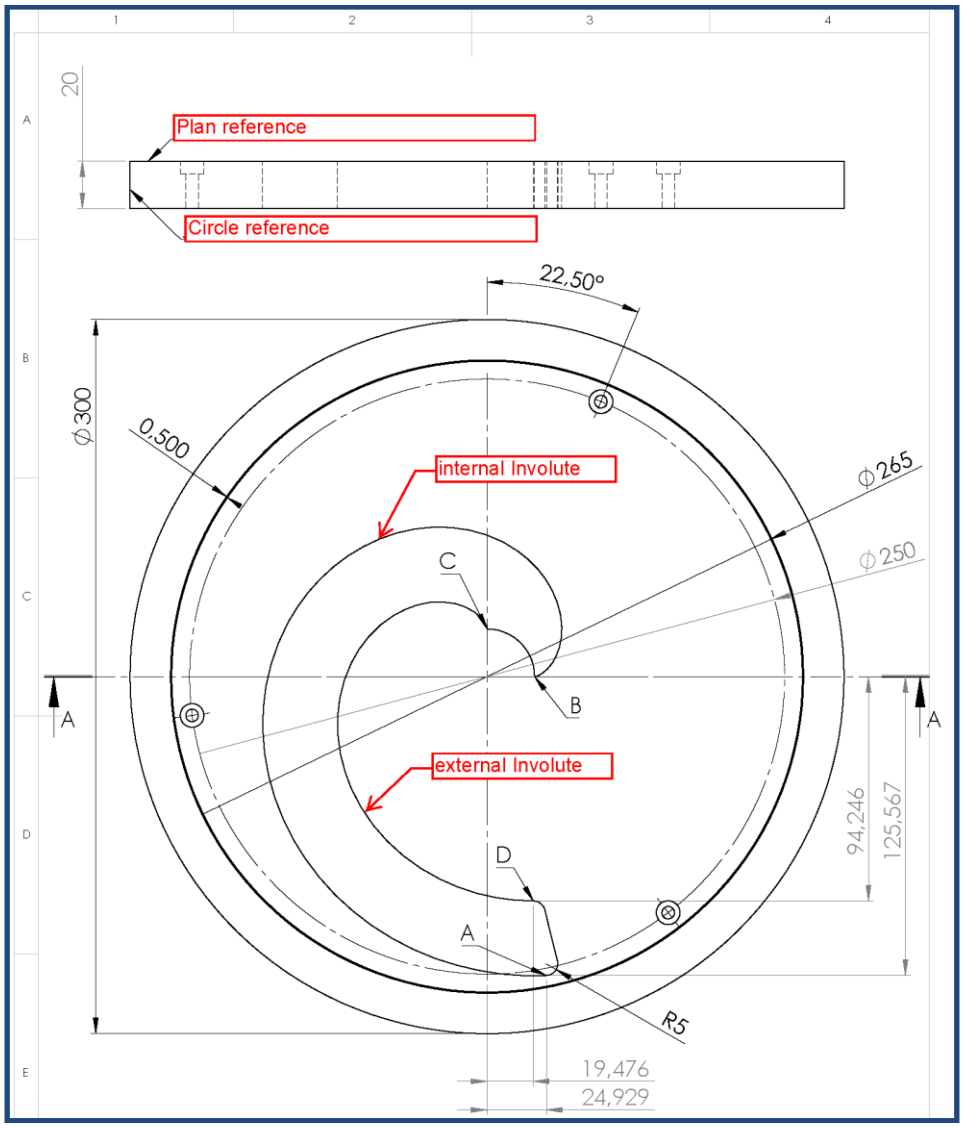

Fig. 2 Technical drawing of the internal involute waviness scanning measurement standard

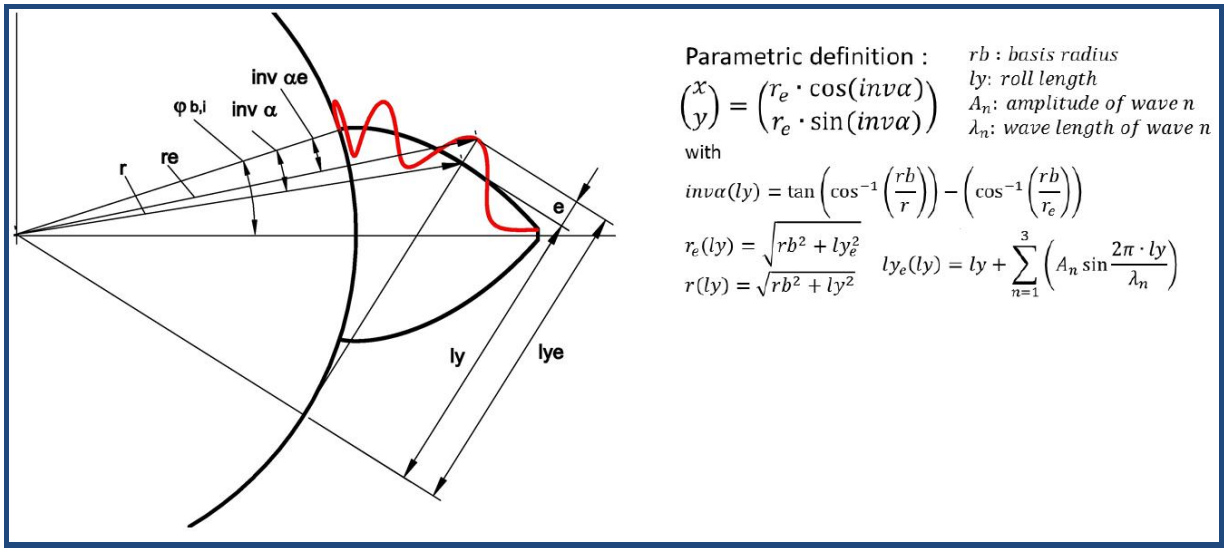

Fig. 3: Parametric function and the sketch of the involute with waviness

2. Experimental setup and plan of measurement

Free form scanning on the SAFT 2w involute profiles was performed on a CMM Leitz PMM-C 12.10.7 with the following machine specification:

- measuring volume: $12 \times 10 \times 7\ \mathrm{dm}^3$;
- **EMP**$_E$ = $0.6\ \mu\mathrm{m} + 1.7 \cdot 10^{-6}\ \mathrm{L}$;
- **P**$_{FTU}$ = $0.6\ \mu\mathrm{m}$;
- Resolution= $0.05\ \mu\mathrm{m}$;
- Stylus model: Leitz trax (tip diameter : 3 mm).

One face of SAFT 2w was equipped with 4 PT100 probes for temperature compensation (Fig 4a). Measurement was performed, for both profiles (Fig. 4b), according the following scanning measuring parameters:

- workpiece orientations (***WO***): 0°, 90° and 210° (Fig. 5);
- scanning speed (***SS***): 2, 8, 14, 20, 24 mm/s;
- stylus length (***SL***) : 35, 135 and 235 mm (135 mm and 235 mm have been obtained by means two titanium extensions of 100 mm and 200 mm, respectively);
- 3 scanning measure repetitions for each parameter set.

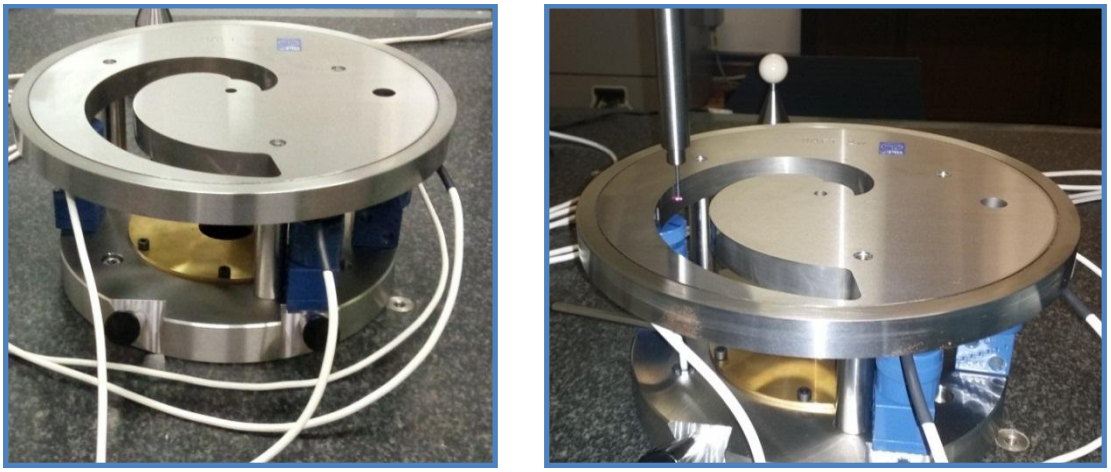

Fig 4: a) thermometers arrangement; b) example of internal involute measuring scanning

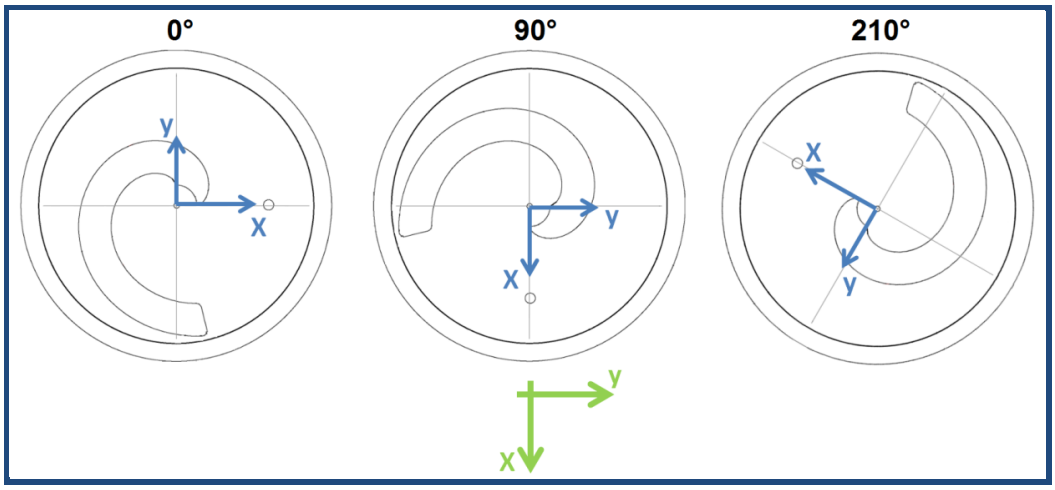

Fig 5: Workpiece orientations: 0°, 90° and 210° with respect to machine x-axis and y-axis (green)

3. Scanning measurement result and data analysis

According to scanning parameters, a total of 270 measurement profiles have been performed[1]. Measurement required two day of machine functioning during which temperature has ranged from 20.5 °C to 20.7 °C. The coordinate system taken for measuring was strictly in accordance with the artefact calibration certificate issued by PTB [2] (Fig 6). From the measurement data the profiles have been calculated as function of length of roll. Then, the theoretical involute was subtracted from data.

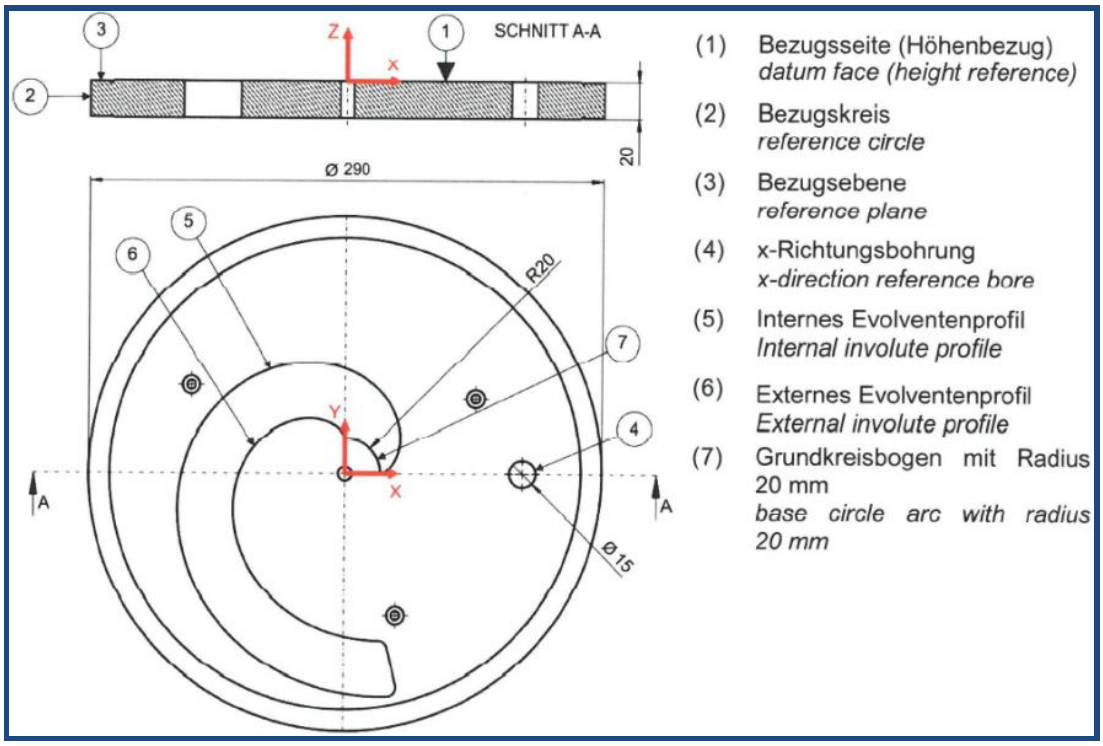

Fig. 6. Sketch of the SAFT w2 (by PTB report D.2.1.2)

A first evaluation of computed data, evidenced the presence of an unexpected periodic deviation of the profile that seemed to reveal some eccentricity[2]. The reduction of eccentricity by theoretical correction gave as result a profile deviation behaviour very similar to the one showed in PTB certificate (see Fig. 7 and Fig 8)

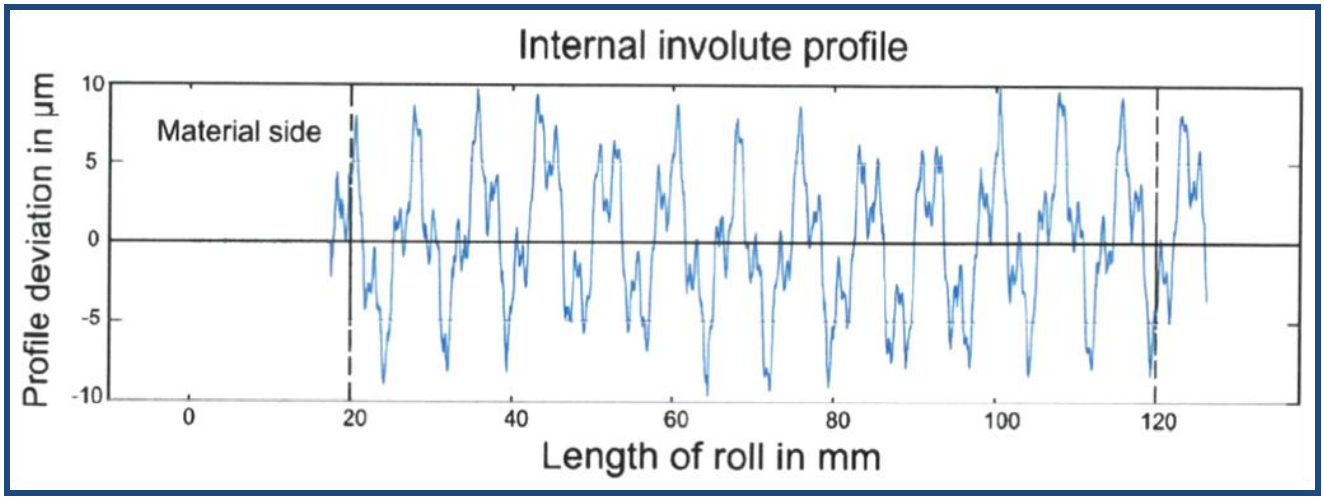

Fig. 7. Example of internal involute profile By PTB certificate n. ref. n. 5.3-2016-014

[1] For more details on measurement execution (Quindos part-program) see Annex A

[2] The presence of periodic deviation has not been evidenced by SAFT 2w calibration certificate [2]- see Annex B .

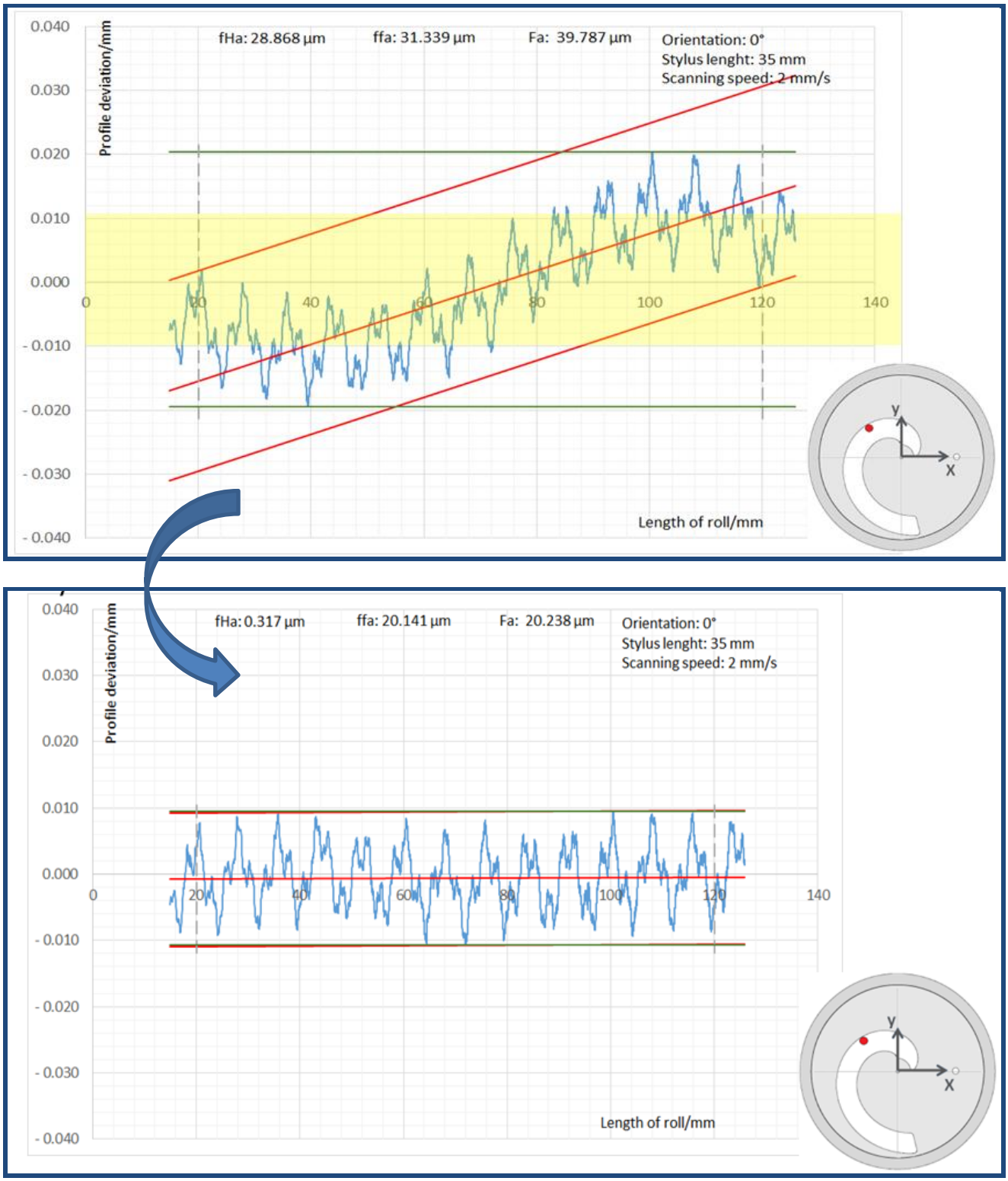

Fig. 8: Profile obtained by measurement without eccentricity reduction and profile reduced by an eccentricity $\bar{e}$

Despite this positive result, the whole sinusoidal effect seems not to be removed by means of the reduction of a mean eccentricity (see Fig. 9 and Fig. 10), moreover correction induce irregularity in f_{Ha} values as function of workpiece orientations (see Tab. 2, 3, 4, and 5); this could suggest the

presence of other effects, as for example thermal effects, that could contribute to the evidenced trend, but these further effects will not be investigated in the present draft.
Notice that also the CMI institute (a project partner) during Final meeting declared that they found the same data behaviour during measurement and that they analysed the measurement data by correcting a theoretical eccentricity even if the correction procedure has not been cited (and therefore described) inside of their deliverable report.
Considering only the presence of an eccentricity as influence effect, a reduction of data distribution has been necessary for the evaluation of profile deviations. In order to reduce eccentricity effects, a mean eccentricity on three couple of coordinates[3] has been computed and then it has been mathematically removed by all measured profiles.

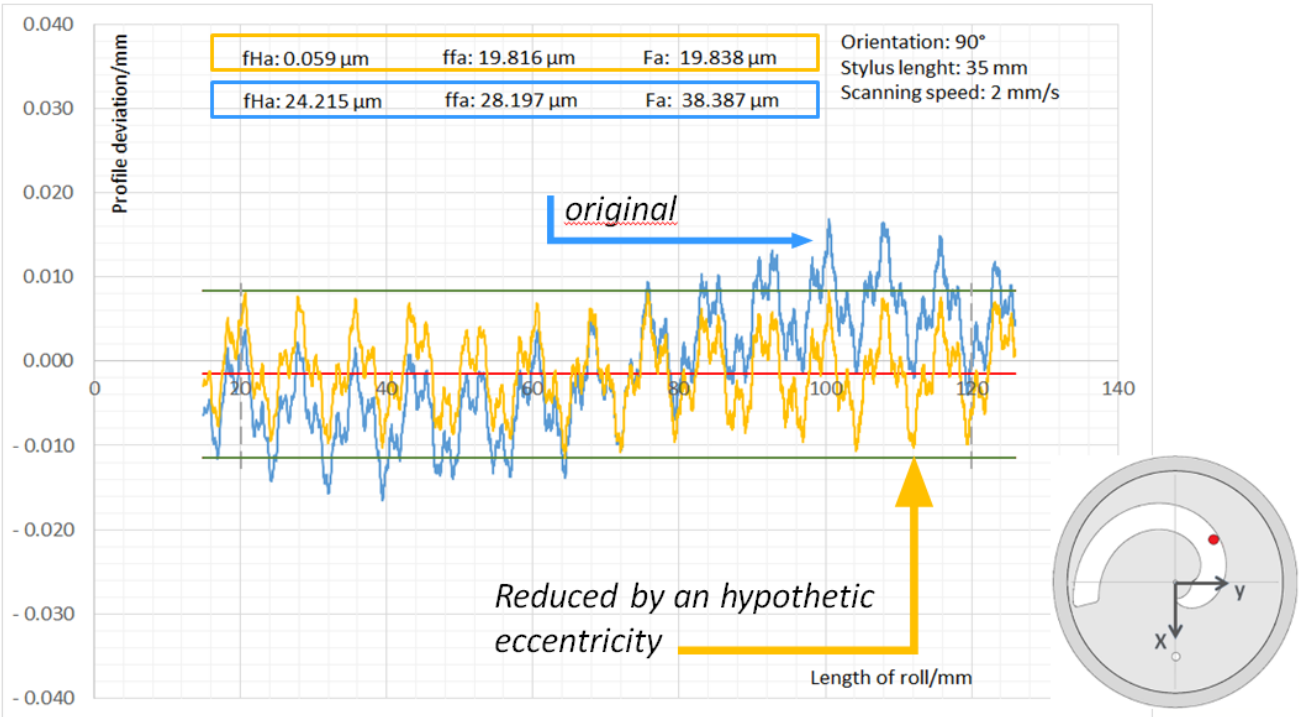

Fig. 9: profile deviation before and after the introduction of a polar eccentricity ***e****; Internal involute profile

[3] The mean eccentricity $\bar{e}$ has been evaluated on 1 repetition and 3 workpiece orientations at scanning speed of 2 mm/s and stylus length of 35 mm in the case of internal involute profile. See Annex C for more details

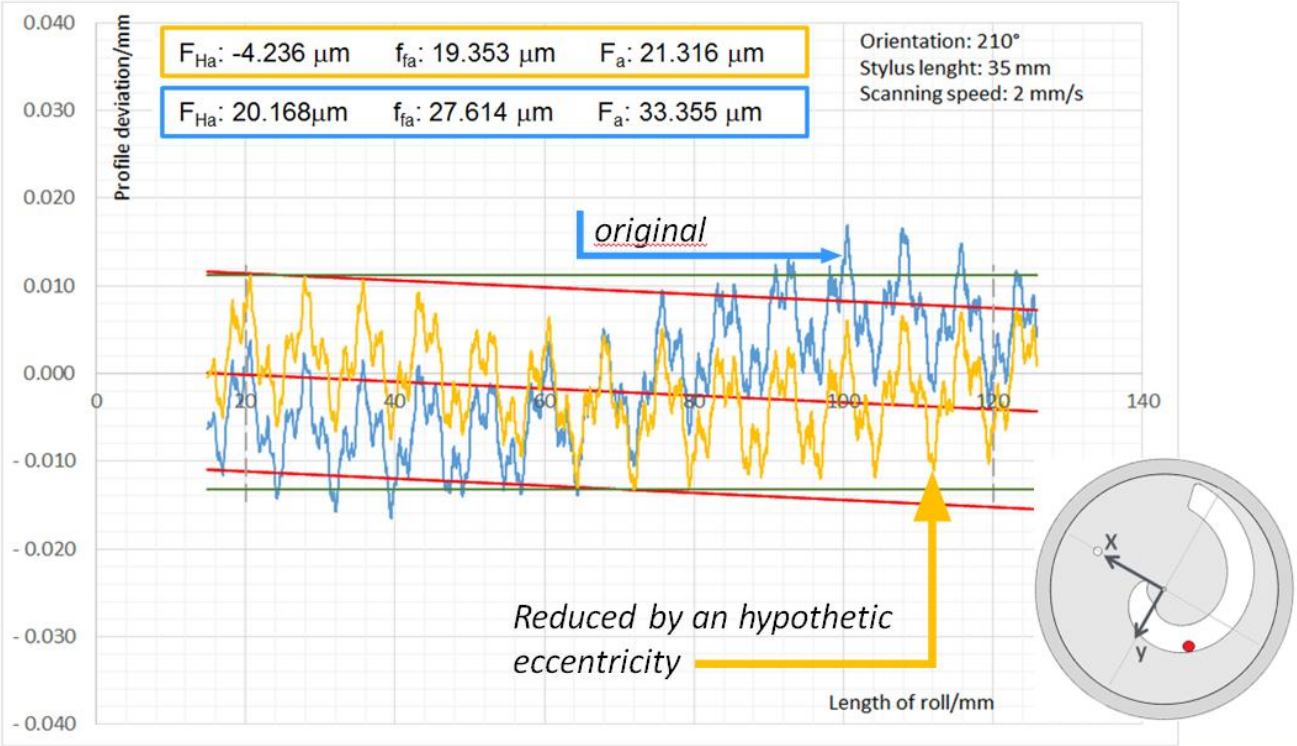

Fig. 10: profile deviations before and after the introduction of a polar eccentricity ***e****; Internal involute profile

As previously evidenced, the mathematical correction, contributes to reduce the sinusoidal effect but it does not remove whole effect, especially in the case of external involute profile, that shows higher values of profile deviations with respect to internal one (see Tab. 2, 3, 4 and 5)

Tab. 2 and Tab. 4 show the result of profile deviation analysis conducted on the data distributions reduced by eccentricity. In particular, for both profiles, the total deviation F_α, the form deviation $f_{f\alpha}$ and the slope deviation $f_{H\alpha}$ have been evaluated within the following evaluation ranges:

involute	***Length of roll***
Internal involute	20 mm ÷ 120 mm
External involute	20 mm ÷ 90 mm

Tab. 3 and tab. 5 show the variability of profile deviations with respect to mean profile deviations evaluated at the best measurement conditions; they have been considered as *best measurement conditions* those conditions that would theoretically guaranteed the lowest effects on measurement result due to scanning speed and stylus length. Therefore, the mean profile deviations have been computed considering the profile deviation values at the following conditions: SL= 35 mm, SS= 2 m/s and WO= 0°, 90°, 210° because it was not possible to distinguish the best workpiece orientation *a priori* (see Annex C for more details about eccentricity correction).

As example of uncorrected profile deviation, Tab. 6 shows the profile deviations for the internal involute profile without eccentricity correction whereas Tab. 7 shows the corrected sample standard deviations of deviation profiles by varying the scanning speed.

The total deviation F_α, the form deviation $f_{f\alpha}$ and the slope deviation $f_{H\alpha}$ in case of uncorrected condition (values in Tab. 6) are also shown in Fig. 11, 12 and 13.

INTERNAL involute - SAFT w2							
Profile Deviations/ µm	**Stylus lenght / mm**	**Orientation / °**	**Scanning speed / mm s^{-1}**				
			2	8	14	20	24
profile slope deviation $f_{H\alpha}$	35	0	4.457	4.456	4.383	4.175	4.227
		90	-0.198	0.002	-0.049	-0.163	-0.075
		210	-4.236	-4.385	-4.553	-4.880	-4.890
	135	0	6.852	6.955	6.963	6.087	6.332
		90	0.155	0.360	0.294	0.117	-0.820
		210	-3.616	-3.706	-3.799	-4.895	-4.810
	235	0	6.424	6.162	6.156	3.259	3.322
		90	1.000	1.280	1.088	-1.408	-0.032
		210	-5.409	-5.637	-6.054	-8.040	-7.649
profile form deviation $f_{f\alpha}$	35	0	20.706	21.668	21.904	22.816	21.624
		90	23.025	23.555	23.779	23.383	23.064
		210	19.353	21.104	21.518	21.764	21.506
	135	0	20.939	21.817	22.443	23.031	22.906
		90	22.840	23.503	24.016	24.788	24.190
		210	19.680	21.055	22.005	22.530	21.881
	235	0	22.649	22.899	24.580	23.846	23.725
		90	22.747	23.243	24.765	25.779	24.613
		210	20.692	21.083	22.439	23.512	23.633
total profile deviation F_a	35	0	22.312	22.941	23.487	24.322	23.315
		90	22.922	23.556	23.753	23.300	23.025
		210	21.316	22.249	22.029	22.503	22.925
	135	0	23.414	23.972	24.830	24.758	25.198
		90	22.920	23.689	24.167	24.878	23.564
		210	21.280	22.126	22.115	23.703	22.870
	235	0	23.890	24.692	27.264	25.032	23.852
		90	23.262	23.905	25.327	25.162	24.594
		210	23.411	23.662	25.685	26.761	26.391

Tab 2: internal involute profile deviations

INTERNAL involute - SAFT w2							
Profile deviations variability / µm	Stylus lenght / mm	Orientation / °	Scanning speed / mm s^{-1}				
			2	8	14	20	24
$f_{H\alpha} - \bar{f}_{H\alpha}$	35	0	4.449	4.448	4.376	4.167	4.219
		90	-0.206	-0.006	-0.057	-0.170	-0.083
		210	-4.243	-4.393	-4.560	-4.887	-4.898
	135	0	6.845	6.947	6.955	6.079	6.325
		90	0.148	0.352	0.286	0.110	-0.828
		210	-3.624	-3.713	-3.807	-4.903	-4.817
	235	0	6.416	6.154	6.149	3.251	3.314
		90	0.993	1.272	1.080	-1.416	-0.040
		210	-5.417	-5.645	-6.062	-8.048	-7.656
$f_{f\alpha} - \bar{f}_{f\alpha}$	35	0	-0.322	0.640	0.876	1.788	0.596
		90	1.997	2.528	2.751	2.355	2.036
		210	-1.675	0.076	0.490	0.736	0.478
	135	0	-0.089	0.789	1.415	2.003	1.879
		90	1.812	2.475	2.988	3.761	3.162
		210	-1.348	0.028	0.977	1.502	0.853
	235	0	1.621	1.871	3.552	2.818	2.698
		90	1.720	2.215	3.737	4.751	3.585
		210	-0.336	0.055	1.411	2.484	2.605
$F_\alpha - \bar{F}_\alpha$	35	0	0.129	0.758	1.303	2.138	1.132
		90	0.739	1.373	1.570	1.116	0.841
		210	-0.868	0.065	-0.155	0.319	0.742
	135	0	1.230	1.789	2.646	2.574	3.015
		90	0.737	1.505	1.983	2.694	1.380
		210	-0.904	-0.058	-0.069	1.519	0.686
	235	0	1.706	2.509	5.080	2.848	1.669
		90	1.079	1.722	3.143	2.979	2.411
		210	1.228	1.479	3.501	4.577	4.207

Mean profile deviations (SS= 2 mm/s;SL=35 mm)	$\bar{f}_{H\alpha}$ = 0.008 µm	$\bar{f}_{f\alpha}$= 21.028 µm	$\bar{F}_\alpha$ = 22.184 µm

Tab. 3: Internal profile deviations variability with respect to mean profile deviations at best scanning conditions (SS= 2 mm/s, SL= 35 mm, for all orientations)

EXTERNAL involute - SAFT w2							
Profile Deviations/ µm	Stylus lenght / mm	Orientation / °	Scanning speed / mm s^{-1}				
			2	8	14	20	24
profile slope deviation $f_{H\alpha}$	35	0	2.776	3.032	3.079	3.172	3.023
		90	-5.558	-5.190	-5.114	-4.913	-5.054
		210	-4.814	-5.450	-5.739	-5.809	-6.338
	135	0	6.138	7.208	7.269	7.198	6.477
		90	-5.393	-4.742	-4.529	-4.496	-4.974
		210	-4.567	-4.837	-4.821	-4.962	-6.274
	235	0	6.656	7.784	7.854	7.649	6.812
		90	-3.889	-3.104	-3.296	-3.176	-4.151
		210	-5.043	-5.185	-5.401	-5.418	-7.488
profile form deviation $f_{f\alpha}$	35	0	19.049	20.031	20.160	19.985	20.108
		90	19.678	20.269	20.420	20.778	20.904
		210	18.719	19.740	19.865	20.131	19.808
	135	0	19.847	20.919	20.712	20.243	20.262
		90	19.975	20.746	21.105	20.679	20.917
		210	18.311	19.750	19.732	19.951	19.336
	235	0	19.864	20.943	22.655	21.085	20.916
		90	20.465	22.992	21.681	23.243	24.797
		210	19.793	20.674	21.810	22.103	20.613
total profile deviation F_a	35	0	19.814	20.834	21.277	20.898	20.971
		90	19.123	19.792	20.317	20.633	20.613
		210	20.545	21.889	22.408	21.995	21.764
	135	0	22.125	22.949	24.417	23.319	23.453
		90	19.287	19.679	20.094	19.902	20.076
		210	20.103	21.170	21.635	21.140	21.608
	235	0	22.239	22.710	26.785	24.553	23.863
		90	19.462	21.866	20.734	22.495	23.699
		210	21.993	22.929	23.276	24.468	23.853

Tab 4: External involute profile deviations

EXTERNAL involute - SAFT w2							
Profile deviations variability / µm	Stylus lenght / mm	Orientation / °	Scanning speed / mm s^{-1}				
			2	8	14	20	24
$f_{H\alpha} - \bar{f}_{H\alpha}$	35	0	5.308	5.564	5.611	5.704	5.555
		90	-3.026	-2.658	-2.582	-2.381	-2.522
		210	-2.282	-2.918	-3.207	-3.277	-3.806
	135	0	8.670	9.740	9.801	9.730	9.009
		90	-2.861	-2.210	-1.997	-1.964	-2.442
		210	-2.035	-2.305	-2.289	-2.430	-3.742
	235	0	9.188	10.316	10.386	10.181	9.344
		90	-1.357	-0.572	-0.764	-0.644	-1.619
		210	-2.511	-2.653	-2.869	-2.886	-4.956
$f_{f\alpha} - \bar{f}_{f\alpha}$	35	0	-0.100	0.882	1.011	0.837	0.960
		90	0.530	1.121	1.271	1.630	1.756
		210	-0.430	0.591	0.716	0.983	0.659
	135	0	0.698	1.771	1.564	1.094	1.113
		90	0.827	1.597	1.956	1.531	1.768
		210	-0.837	0.602	0.584	0.802	0.188
	235	0	0.715	1.794	3.507	1.936	1.767
		90	1.317	3.844	2.533	4.095	5.648
		210	0.644	1.526	2.662	2.954	1.464
$F_\alpha - \bar{F}_\alpha$	35	0	-0.014	1.007	1.450	1.071	1.143
		90	-0.705	-0.035	0.490	0.806	0.786
		210	0.718	2.062	2.581	2.168	1.937
	135	0	2.298	3.121	4.590	3.492	3.626
		90	-0.540	-0.148	0.267	0.075	0.249
		210	0.276	1.343	1.808	1.313	1.781
	235	0	2.412	2.883	6.958	4.726	4.036
		90	-0.366	2.039	0.906	2.668	3.872
		210	2.166	3.101	3.448	4.641	4.026

Mean profile deviations (SS=2 mm/s; SL= 35 mm)	$\bar{f}_{H\alpha}$ = -2.532 µm	$\bar{f}_{f\alpha}$= 19.149 µm	$\bar{F}_\alpha$ = 19.827 µm

Tab. 5: External profile deviations variability with respect to mean profile deviations evaluated at best scanning conditions (SS= 2 mm/s, SL= 35 mm, for all orientations)

internal profile scanning - *no eccentricity correction*							
Profile Deviation	Stylus lenght / mm	Orientation / °	Scanning speed / mm s^{-1}				
			2	8	14	20	24
$fH\alpha$ / µm	35	0	28.868	28.852	28.775	28.569	28.626
		90	24.215	24.399	24.344	24.232	24.319
		210	20.168	20.004	19.828	19.522	19.508
	135	0	31.260	31.348	31.355	30.477	30.726
		90	24.566	24.757	24.686	24.505	23.574
		210	20.784	20.681	20.600	19.505	19.576
	235	0	30.831	30.555	30.551	27.649	27.728
		90	25.411	25.677	25.483	22.989	24.367
		210	18.992	18.746	18.349	16.359	16.752
$ff\alpha$ / µm	35	0	31.339	31.825	31.572	31.691	32.404
		90	28.197	28.614	28.855	29.233	29.326
		210	27.614	27.567	27.708	27.664	28.241
	135	0	32.425	33.086	33.221	33.045	33.257
		90	28.311	29.348	29.876	30.588	29.831
		210	28.092	27.906	28.731	28.743	27.919
	235	0	33.981	33.648	34.741	33.961	34.449
		90	29.558	30.097	30.148	29.183	30.169
		210	28.728	29.471	29.503	28.242	26.799
$F\alpha$ / µm	35	0	39.787	41.087	40.725	41.946	41.497
		90	38.387	39.610	39.425	39.849	40.005
		210	33.355	34.081	35.004	35.064	34.264
	135	0	41.067	41.710	42.727	42.962	42.810
		90	38.519	38.911	39.961	41.563	40.655
		210	34.013	34.398	35.495	35.498	34.882
	235	0	41.125	42.129	44.841	42.563	41.186
		90	39.650	40.239	42.000	40.188	41.380
		210	32.873	33.822	34.861	34.166	33.723

Tab. 6: Internal profile deviations without eccentricity correction

s($fH\alpha$) / µm	35	0	0.134	s($ff\alpha$) / µm	35	0	0.399	s($F\alpha$) / µm	35	0	0.821
		90	0.078			90	0.462			90	0.637
		210	0.291			210	0.275			210	0.708
	135	0	0.405		135	0	0.337		135	0	0.828
		90	0.482			90	0.841			90	1.247
		210	0.633			210	0.425			210	0.660
	235	0	1.624		235	0	0.434		235	0	1.513
		90	1.126			90	0.442			90	0.965
		210	1.202			210	1.113			210	0.722

Tab. 7: corrected sample standard deviations of deviation profiles by varying the scanning speed.

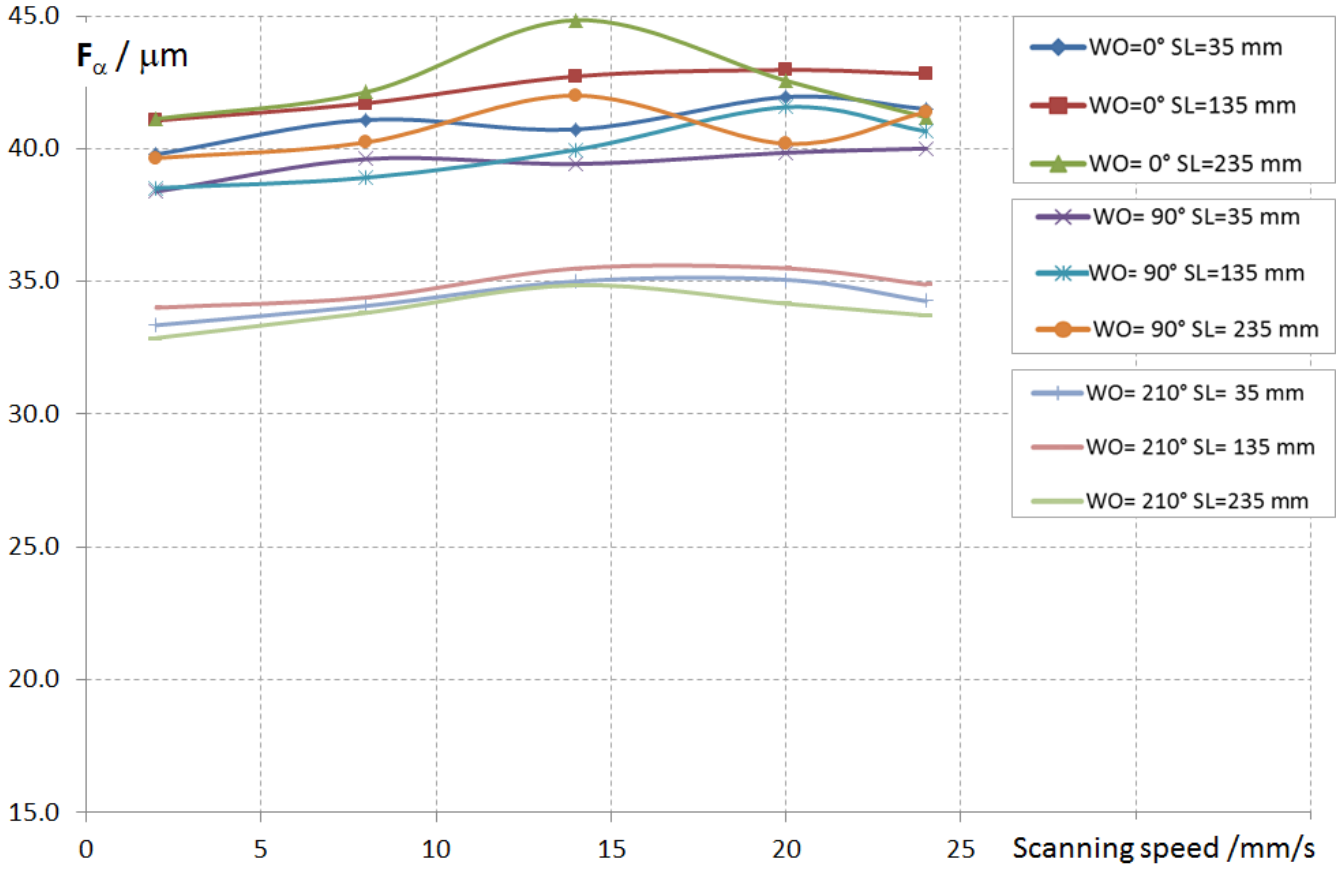

Fig. 11: Total deviation at different scanning speeds, workpiece orientations and Stylus lengths – internal involute

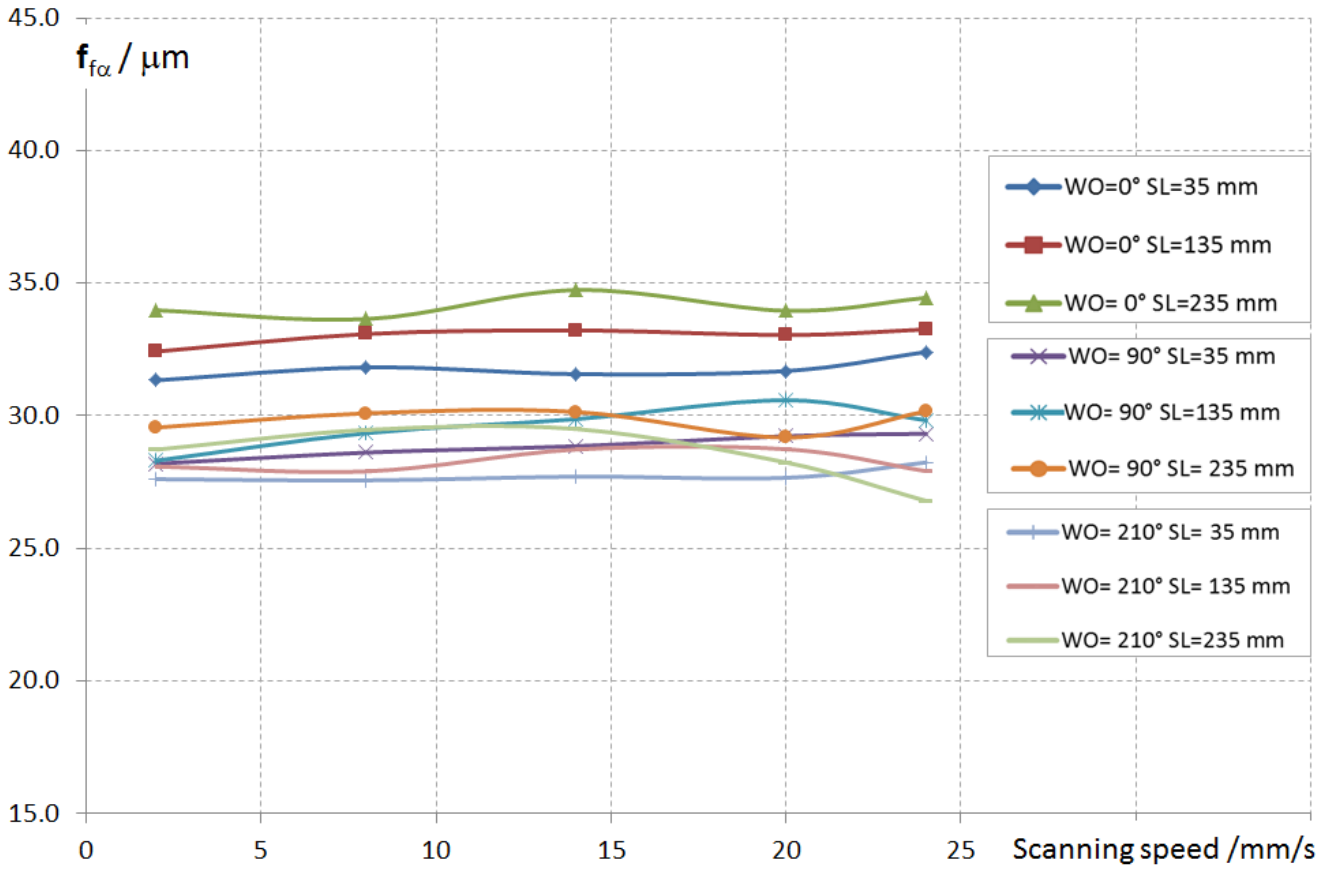

Fig. 12: form deviation at different scanning speeds, workpiece orientations and Stylus lengths – internal involute

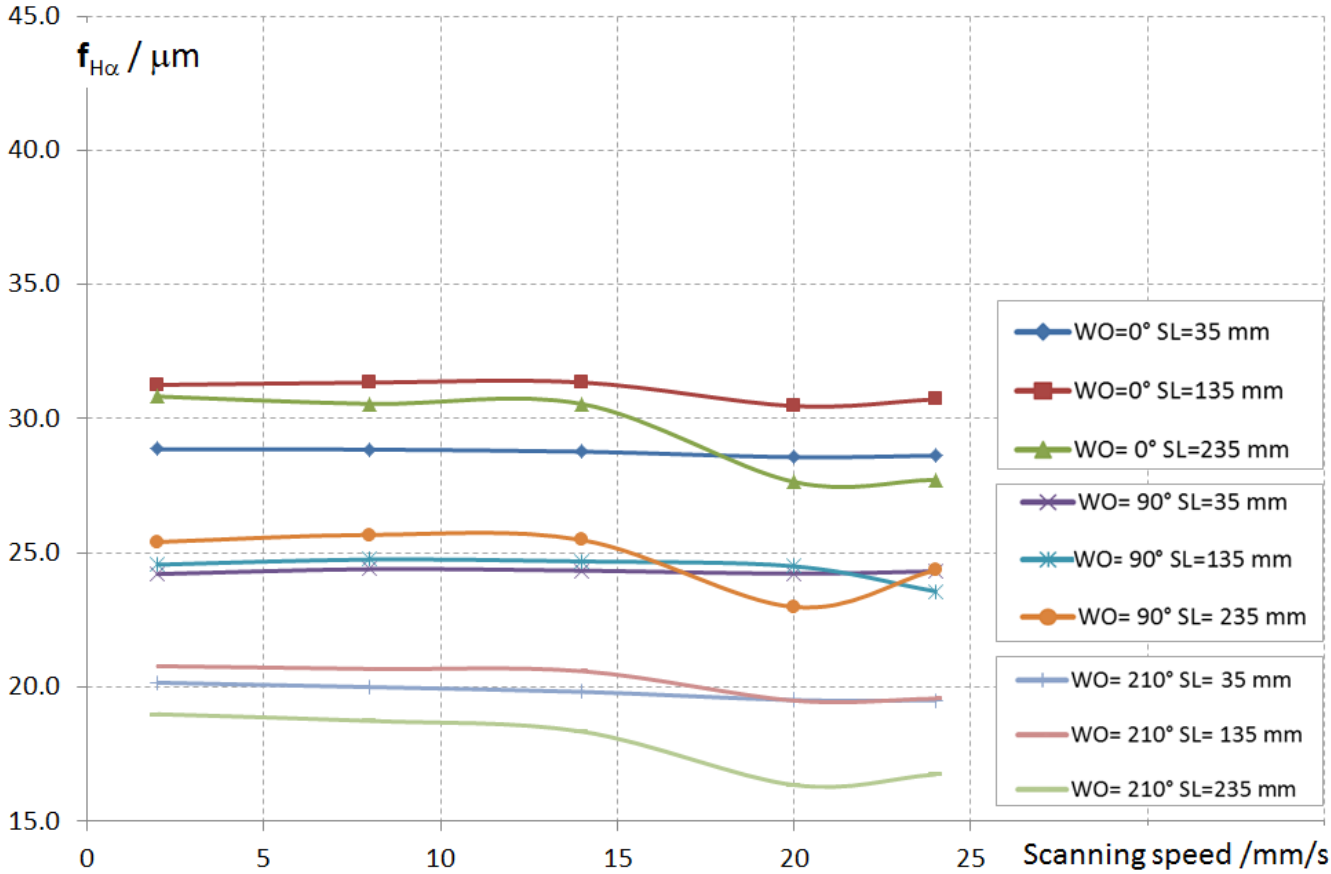

Fig. 13: slope deviation at different scanning speeds, workpiece orientations and Stylus lengths – internal involute

After the profile deviation analysis, measurement data have been spectral analysed by means of FFT method in order to determine the superimposed waviness as a function of scanning parameters; furthermore the three largest amplitudes within the evaluation range have been determined. The found wavelengths and amplitudes indicates the presence of a waviness consistent with the superposed nominal waviness (see section 1) . Tables 8, 9, 10 and 11 summarize result obtained at different measurement conditions (workpiece orientations, scanning speeds and stylus lengths). Since data analyses show that scanning conditions do not influence significantly the FFT result and that detection of superposed waviness is very repeatable with scanning speeds (SS) (see Tab 8 and Tab. 10), it has been decided to show the result at different stylus lengths (SL) and orientations (WO) only in the cases of SS= 2 mm/s.
Finally, Fig. 14 and Fig. 15 show two examples of conduced FFT analysis.

SL= 35 mm, WO= 0° - INTERNAL INVOLUTE PROFILE									
SS / mm s^{-1}	f_1 / mm^{-1}	λ_1 / mm	A_1 / µm	f_2 / mm^{-1}	λ_2 / mm	A_2 / µm	f_3 / mm^{-1}	λ_3 / mm	A_3 / µm
2	0.1201	8.330	4.304	0.4002	2.499	2.970	1.2505	0.800	0.990
8	0.1200	8.331	4.298	0.4001	2.499	2.972	1.2503	0.800	1.089
14	0.1200	8.333	4.290	0.4001	2.500	3.005	1.2502	0.800	1.182
20	0.1200	8.332	4.321	0.4001	2.500	3.044	1.2502	0.800	1.051
24	0.1200	8.333	4.323	0.4000	2.500	3.094	1.2500	0.800	1.043

Tab. 8. result of FFT analysis for the internal involute profile at different SS and at SL= 35 mm, WO= 0°

SS = 2 mm/s, WO= 0° - INTERNAL INVOLUTE PROFILE									
SL / mm	f_1 / mm^{-1}	λ_1 / mm	A_1 / µm	f_2 / mm^{-1}	λ_2 / mm	A_2 / µm	f_3 / mm^{-1}	λ_3 / mm	A_3 / µm
35	0.1201	8.330	4.304	0.4002	2.499	2.970	1.2505	0.800	0.990
135	0.1200	8.331	4.311	0.4001	2.499	2.975	1.2504	0.800	0.993
235	0.1200	8.331	4.318	0.4001	2.499	2.976	1.2504	0.800	1.002

SS = 2 mm/s, WO= 90°- INTERNAL INVOLUTE PROFILE									
SL / mm	f_1 / mm^{-1}	λ_1 / mm	A_1 / µm	f_2 / mm^{-1}	λ_2 / mm	A_2 / µm	f_3 / mm^{-1}	λ_3 / mm	A_3 / µm
35	0.1200	8.334	4.274	0.4000	2.500	2.969	1.2499	0.800	0.990
135	0.1201	8.330	4.293	0.4002	2.499	2.981	1.2505	0.800	0.996
235	0.1201	8.330	4.310	0.4002	2.499	2.983	1.2505	0.800	1.014

SS = 2 mm/s, WO= 210° - INTERNAL INVOLUTE PROFILE									
SL / mm	f_1 / mm^{-1}	λ_1 / mm	A_1 / µm	f_2 / mm^{-1}	λ_2 / mm	A_2 / µm	f_3 / mm^{-1}	λ_3 / mm	A_3 / µm
35	0.1200	8.333	4.313	0.4000	2.500	2.972	1.2501	0.800	0.991
135	0.1200	8.333	4.308	0.4000	2.500	2.972	1.2501	0.800	0.994
235	0.1200	8.333	4.323	0.4000	2.500	2.975	1.2500	0.800	0.993

Tab. 9: result of FFT analysis for internal involute profile at SS= 2 mm/s and different SL and WO

SL= 35mm, WO= 0° - EXTERNAL INVOLUTE PROFILE									
SS / mm s^{-1}	f_1 / mm^{-1}	λ_1 / mm	A_1 / µm	f_2 / mm^{-1}	λ_2 / mm	A_2 / µm	f_3 / mm^{-1}	λ_3 / mm	A_3 / µm
2	0.1286	7.777	4.799	0.4001	2.500	2.928	1.2430	0.804	0.857
8	0.1286	7.779	4.806	0.4000	2.500	2.935	1.2570	0.796	1.063
14	0.1286	7.776	4.799	0.4001	2.500	2.970	1.2574	0.795	0.993
20	0.1286	7.776	4.767	0.4001	2.499	3.069	1.2432	0.804	0.890
24	0.1286	7.777	4.779	0.4001	2.500	3.142	1.2430	0.804	0.873

Tab. 10. result of FFT analysis for the external involute profile at different SS and at SL= 35 mm, WO= 0°

SS = 2 mm/s, WO= 0°- EXTERNAL INVOLUTE PROFILE									
SL / mm	f_1 / mm^{-1}	λ_1 / mm	A_1 / µm	f_2 / mm^{-1}	λ_2 / mm	A_2 / µm	f_3 / mm^{-1}	λ_3 / mm	A_3 / µm
35	0.1286	7.777	4.799	0.4001	2.500	2.928	1.2430	0.804	0.857
135	0.1286	7.777	4.799	0.4001	2.500	2.936	1.2430	0.804	0.871
235	0.1286	7.777	4.806	0.4001	2.500	2.932	1.2430	0.804	0.880

SS = 2 mm/s, WO= 90°- EXTERNAL INVOLUTE PROFILE									
SL / mm	f_1 / mm^{-1}	λ_1 / mm	A_1 / µm	f_2 / mm^{-1}	λ_2 / mm	A_2 / µm	f_3 / mm^{-1}	λ_3 / mm	A_3 / µm
35	0.1286	7.775	4.781	0.4001	2.499	2.927	1.2432	0.804	0.865
135	0.1286	7.776	4.770	0.4001	2.499	2.935	1.2432	0.804	0.873
235	0.1286	7.776	4.770	0.4001	2.499	2.938	1.2431	0.804	0.915

SS = 2 mm/s, WO= 210°- EXTERNAL INVOLUTE PROFILE									
SL / mm	f_1 / mm^{-1}	λ_1 / mm	A_1 / µm	f_2 / mm^{-1}	λ_2 / mm	A_2 / µm	f_3 / mm^{-1}	λ_3 / mm	A_3 / µm
35	0.1286	7.778	4.793	0.4000	2.500	2.934	1.2428	0.805	0.860
135	0.1286	7.776	4.782	0.4001	2.500	2.930	1.2431	0.804	0.862
235	0.1286	7.776	4.772	0.4001	2.500	2.924	1.2431	0.804	0.891

Tab. 11: result of FFT analysis for external involute profile at SS= 2 mm/s and different SL and WO

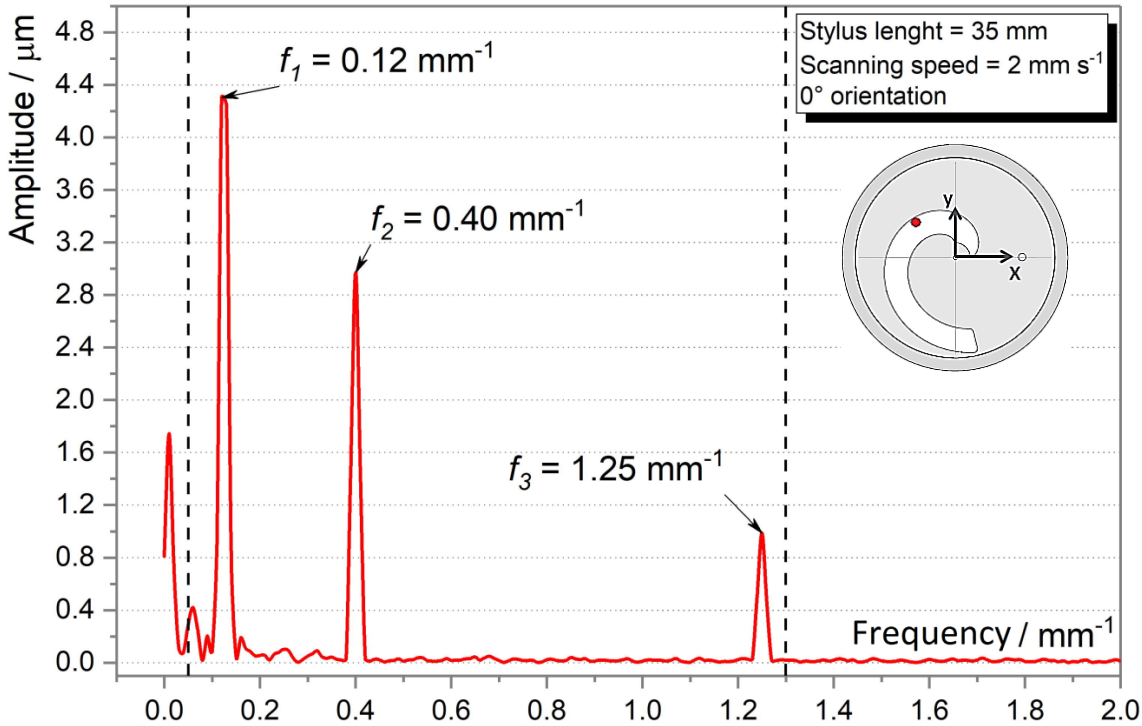

Fig. 8: FFT for internal involute profile (SL= 35 mm, SS= 2 mm/s, WO= 0°); dashed lines mark the evaluation range wavelength: 0.77 mm – 20 mm

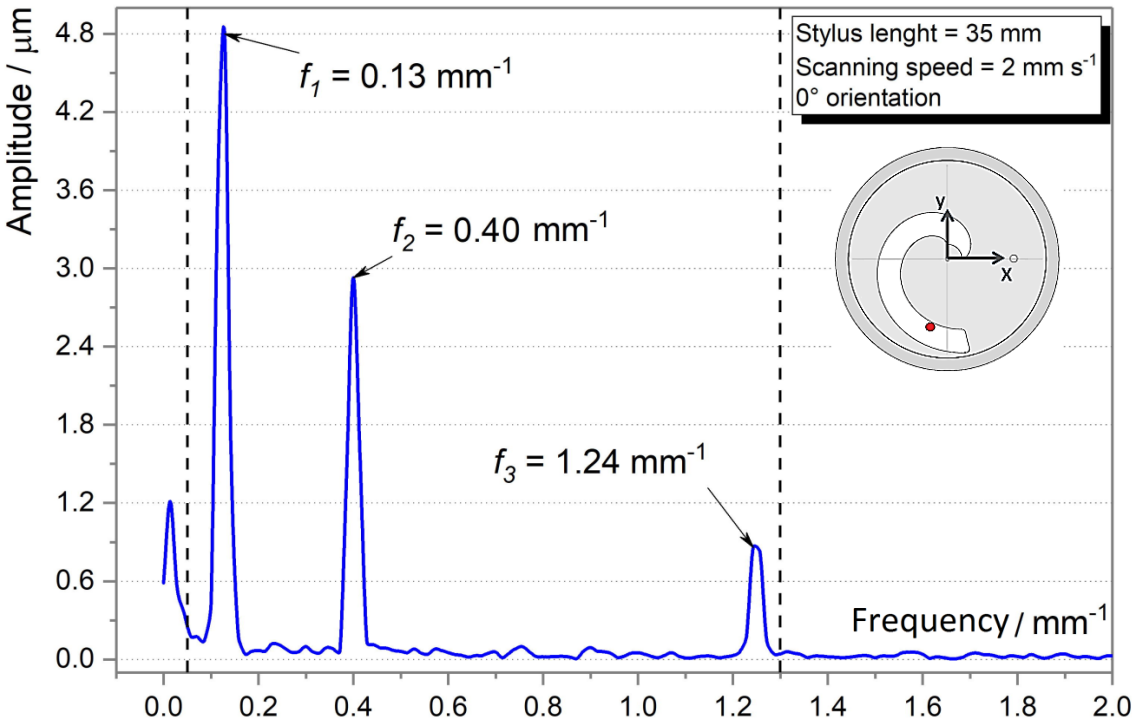

Fig. 9: FFT for external involute profile (SL= 35 mm, SS= 2 mm/s, WO= 0°); dashed lines mark the evaluation range wavelength: 0.77 mm – 20 mm

Conclusion

Freeform scanning on an internal involute profile measurement standard designed and manufactured by PTB has been conducted. First evaluations on measurement data evidenced the presence of unsuspected effects as a possible eccentricity and some possible thermal effects not deeply investigated, yet.

Result after eccentricity reduction, suggest a not very significant trend of the slope deviation $f_{H\alpha}$ as a function of scanning speed or stylus length; variation of $f_{H\alpha}$ values at different orientations seems to suggest a not adequate evaluation of secondary effect rather than a real effect of orientation on measurement result (this aspect has to be investigated in more detail). About total deviations F_{α}, and form deviations $f_{f\alpha}$ is not present a significant trend as function of scanning speed, orientation or stylus length; limited differences seem to suggest a modest worsening of performances but magnitudes of these differences do not allow to define a clear trend.

On the contrary, spectral analysis of data, suggest high and stable performances of the machine. Actually, result show that evaluations of wavelength and amplitude are very repeatable and that they are not influenced by workpiece orientation, scanning speed or stylus length.

In particular, negligible variations in evaluation of wavelength and amplitude as function of orientations and stylus length could means respectively an adequate compensation of machine geometrical error and a valid probing system qualification, whereas the analysis in term of scanning speed (in the scanning speed range considered with respect to the waviness investigated) allows to confirm the maintenance of these high performances also at the most critical measuring conditions.

Therefore, generally, the waviness analysis result allows to give an overall positive evaluation in term of performances for the CMM used in this work.

Reference

[1] PTB Report - deliverable D 2.1.1
[2] PTB Report - deliverable D 2.1.2

Annexes

A - Quindos part-program
B – TR 17/2017 – Annex B: SAFT w2 calibration certificate by PTB
C - Eccentricity correction (formulary)

Annex A - T.R. 17/2017:

Q7 part program "*DriveTrain evolvente.wdb*" – 01/08/2017 for the scanning of the internal involute waviness standard performed on the INRIM CMM Leitz PMM- C 12.10.7

```
! ------------------------ JRP DriveTrain --------------------------
!---------------------- Campione d'evolvente -------------------------
! Geometria del campione
!distanza dal bordo esterno del colletto per la presa punti del piano superiore
BORDO=5
SEMI_SPESSORE=10
SEMI_INGOMBRO=145
~TEMPER_FILE=C:\002 - Corradi NI\filePerQ7.txt
~RADICE_FILE=C:\Users\LNPC775\Desktop\DriveTrain evolvente\MISURE\Pos0210-St235-Vel
~RIPETIZIONE=-Rip3.txt
SPEED(1)=2
SPEED(2)=8
SPEED(3)=14
SPEED(4)=20
SPEED(5)=24
! Velocità
!USECMM         (NAM=LENTA)
USECMM          (NAM=VELOCE)
! Qualifica tastatore
DfnArtefact     (NAM=S1, DIA=CAL$NOR, SAZ=0.0, SEL=90.0, SDM=8.0, COE=0.0000065)
QualifyTool     (NAM=PRB, DIA=3.000, NRF=Y, REF=S1, SCN=Y, SNT=TRX, RPT=(0,0,-235), DEL=N, GEO=SPH)
MoveCmmInmm     (TYP=DLT, DST=(,,100))
SHOW            (NAM=PRB, DEV=TT, TYP=ELE, STY=EVA)
STOP
MessageBox      (STR="Misura manuale?", BUT=4, ICO=2, DFB=1)
If              (BXP=~MsgBoxResult=="Yes")
  ! Sistema di riferimento manuale
  EDTMSG        (NAM=PIANO_MAN, CRE=Y)
  MEPLA         (NAM=PIANO_MAN, CSY=CMMA$CSY, ITY=GSS, MSG=PIANO_MAN, DEL=Y)
  EDTMSG        (NAM=CENTRO_MAN, CRE=Y)
  MECIR         (NAM=CENTRO_MAN, CSY=CMMA$CSY, PRO=PIANO_MAN, PTY=EX, MSG=CENTRO_MAN, DEL=Y)
  EDTMSG        (NAM=CERCHIO_MAN, CRE=Y)
  MECIR         (NAM=CERCHIO_MAN, CSY=CMMA$CSY, PRO=PIANO_MAN, PTY=EX, MSG=CERCHIO_MAN, DEL=Y)
  DIPNTPNT      (NAM=ASSE_X_MAN, CSY=CMMA$CSY, EL1=CENTRO_MAN, EL2=CERCHIO_MAN)
  BLDCSY        (NAM=CSY_MAN, TYP=CAR, SPA=PIANO_MAN, SDR=+Z, PLA=ASSE_X_MAN, PDR=+X, XZE=CENTRO_MAN,
YZE=CENTRO_MAN, ZZE=CENTRO_MAN)
EndIf
USECSY          (NAM=CSY_MAN)

! Ripresa sistema di riferimento automatico
GENCIR          (NAM=PIANO_AUT, XCO=0, YCO=0, ZCO=0, DIA=CENTRO_MAN.$A-2*BORDO, NPT=8, PLA=XY, INO=P,
CSY=CSY_MAN, ZVL=50)
GENCIR          (NAM=CENTRO_AUT, XCO=0, YCO=0, ZCO=-SEMI_SPESSORE, DIA=CENTRO_MAN.$A, NPT=8, PLA=XY, INO=O,
CSY=CSY_MAN, ZVL=50+SEMI_SPESSORE)
GENCIR          (NAM=CERCHIO_AUT, XCO=ASSE_X_MAN.$A, YCO=0, ZCO=-SEMI_SPESSORE, DIA=CERCHIO_MAN.$A, NPT=8,
PLA=XY, INO=I, CSY=CSY_MAN, ZVL=50+SEMI_SPESSORE)
MoveCmmInmm     (TYP=ABS, DST=(0,0,100), CSY=CSY_MAN)
MEPLA           (NAM=PIANO_AUT, CSY=CSY_MAN, ITY=GSS)
MECIR           (NAM=CENTRO_AUT, CSY=CSY_MAN, PRO=PIANO_AUT, PTY=EX)
MECIR           (NAM=CERCHIO_AUT, CSY=CSY_MAN, PRO=PIANO_AUT, PTY=EX)
DIPNTPNT        (NAM=ASSE_X_AUT, CSY=CSY_MAN, EL1=CENTRO_AUT, EL2=CERCHIO_AUT)
BLDCSY          (NAM=CSY_AUT, TYP=CAR, SPA=PIANO_AUT, SDR=+Z, PLA=ASSE_X_AUT, PDR=+X, XZE=CENTRO_AUT,
YZE=CENTRO_AUT, ZZE=CENTRO_AUT)
!---------------------------------- !
!---------- TEMPERATURE------------- !
!-----------------------------------!
! acquisizione Temperature scale CMM !
! LEGGO SOLO
TMPCOMP         (COE=0.000000, AUT=Y, TEL=TEMP, DEL=Y)
!
GETVALS         (OBJ=TEMP, TYP=ELE, RDS=(X,Y,Z), REA=(X,Y,Z))
! acquisizione Temperature campione evolvente
! chiama la procedura
DELCHS          (NAM=CHS:~IMP2EVA_*, CNF=N, TYP=CHS)
~IMP2EVA_FILE = ~TEMPER_FILE
~IMP2EVA_X = 'TERM_1'
~IMP2EVA_Y = 'TERM_2'
~IMP2EVA_Z = 'TERM_3'
~IMP2EVA_A = 'TERM_4'
~IMP2EVA_B = ''
~IMP2EVA_D = ''
```

```
~IMP2EVA_E = ''
~IMP2EVA_F = ''
INDPRC          (NAM=IMP2EVA)
! copia elemento creato dalla procedura e poi lo cancella
CPYOBJ          (FRM=IMP2EVA_ELE, TO =TEMP_CAL_A)
DELELE          (NAM=IMP2EVA_ELE, CNF=N)
!leggo le 4 temperature
GETVALS         (OBJ=TEMP_CAL_A, TYP=ELE, RDS=(X,Y,Z,A), REA=(T1,T2,T3,T4))
MEDIAT=(T1+T2+T3+T4)/4
TMPCOMP         (TEX=X, TEY=Y, TEZ=Z, TEW=MEDIAT, COE=0.0000115, AUT=N, TEL=TEMP_CAL_A, DEL=N)

DO              (NAM=I, BGN=1, END=5)
  ! muove in posizione inizio scansione interno
  MoveCmmInmm     (TYP=ABS, DST=(16,26,20), CSY=CSY_AUT)
  !Imposta la velocià di scansione
  PUTVALS         (OBJ=CONTORNO_INT.NOM.PTS(3), TYP=ELE, RDS=A, VAL=SPEED(I))
  !scansione bordo interno
  ME2DE           (NAM=CONTORNO_INT, CSY=CSY_AUT, INO=O)
  !compone stringa per output
  ~VEL=-Int
  CVREACHS        (NAM=~VELOCITA, VAL=SPEED(I), FM1=2, INT=Y, ANG=N, SPZ=Y, RLS=Y, RTZ=Y)
  CONCAT          (NAM=~PERCORSO, STR=(~RADICE_FILE,~VELOCITA,~VEL,~RIPETIZIONE), INI=Y)
  !esporta la scansione
  FMTOBJ          (FIL=~PERCORSO, NAM=CONTORNO_INT, STA=NEW, TYP=ELE, STY=APT, DSC=(X,Y,Z), DEL=Y)
  ! muove in posizione
  MoveCmmInmm     (TYP=ABS, DST=(17,-112,20), CSY=CSY_AUT)
  MoveCmmInmm     (TYP=ABS, DST=(16,26,20), CSY=CSY_AUT)
  !imposta velocità di scansione
  PUTVALS         (OBJ=CONTORNO_EST.NOM.PTS(3), TYP=ELE, RDS=A, VAL=SPEED(I))
  !scansione bordo esterno
  ME2DE           (NAM=CONTORNO_EST, CSY=CSY_AUT)
  !compone stringa per output
  ~VEL=-Est
  CVREACHS        (NAM=~VELOCITA, VAL=SPEED(I), FM1=2, INT=Y, ANG=N, SPZ=Y, RLS=Y, RTZ=Y)
  CONCAT          (NAM=~PERCORSO, STR=(~RADICE_FILE,~VELOCITA,~VEL,~RIPETIZIONE), INI=Y)
  !esporta la scansione
  FMTOBJ          (FIL=~PERCORSO, NAM=CONTORNO_EST, STA=NEW, TYP=ELE, STY=APT, DSC=(X,Y,Z), DEL=Y)
  MoveCmmInmm     (TYP=ABS, DST=(17,-112,20), CSY=CSY_AUT)
  MoveCmmInmm     (TYP=ABS, DST=(16,26,20), CSY=CSY_AUT)
ENDDO
!----------------------------------- !
!---------- TEMPERATURE-R----------- !
!-----------------------------------!
! acquisizione Temperature campione evolvente
! chiama la procedura
DELCHS          (NAM=CHS:~IMP2EVA_*, CNF=N, TYP=CHS)
~IMP2EVA_FILE = ~TEMPER_FILE
~IMP2EVA_X = 'TERM_1'
~IMP2EVA_Y = 'TERM_2'
~IMP2EVA_Z = 'TERM_3'
~IMP2EVA_A = 'TERM_4'
~IMP2EVA_B = ''
~IMP2EVA_D = ''
~IMP2EVA_E = ''
~IMP2EVA_F = ''
INDPRC          (NAM=IMP2EVA)
! copia elemento creato dalla procedura e poi lo cancella
CPYOBJ          (FRM=IMP2EVA_ELE, TO =TEMP_CAL_R)
DELELE          (NAM=IMP2EVA_ELE, CNF=N)
! ----------- !
!    Report   !
! ----------- !
! si riportano i due elementi sottostamti secondo il CMMA$CSY
TRAELE          (NEW=CENTRO_ASSOLUTO, TRA=CMMA$CSY, OLD=CENTRO_AUT, TYP=CSY, RPL=Y, EVA=N)
TRAELE          (NEW=ASSE_X_ASSOLUTO, TRA=CMMA$CSY, OLD=ASSE_X_AUT, TYP=CSY, RPL=Y, EVA=N)

DELQUE          (NAM=$RPO, CNF=N, TYP=QUE)
ADDEVA          (NAM=(PRB,TEMP_CAL_A,TEMP_CAL_R))
ADDEVA          (NAM=(CENTRO_ASSOLUTO,ASSE_X_ASSOLUTO))
FLEXREPORT      (LAY=VICI, PRI=N, XFL=C:\Users\LNPC775\Desktop\DriveTrain evolvente\MISURE\report)
STOP
```

Physikalisch-Technische Bundesanstalt
Braunschweig und Berlin
Nationales Metrologieinstitut

Kalibrierschein

Calibration Certificate

Gegenstand: *Object:*	Wellenbehaftetes Evolventen-Scanning-Normal *Involute waviness scanning measurement standard*
Hersteller: *Manufacturer:*	Physikalisch-Technische Bundesanstalt (PTB) Bundesallee 100 D-38116 Braunschweig
Typ: *Type:*	Scanningartefakt mit internem und externem Evolventenprofil mit überlagerter Welligkeit *Scanning artifact with internal and external involute profile with superposed waviness*
Kennnummer: *Serial No.:*	SAFT 2w
Auftraggeber: *Applicant:*	Physikalisch-Technische Bundesanstalt (PTB) Bundesallee 100 D-38116 Braunschweig
Anzahl der Seiten: *Number of pages:*	11
Geschäftszeichen: *Reference No.:*	5.3-2016-014
Kalibrierzeichen: *Calibration mark:*	50574 PTB 16
Datum der Kalibrierung: *Date of calibration:*	2016-03-22

Braunschweig, 2016-05-11

Im Auftrag
On behalf of PTB

Dr. rer. nat. M. Stein

Siegel
Seal

PHYSIKALISCH-TECHNISCHE BUNDESANSTALT 7

Im Auftrag
On behalf of PTB

Dipl.-Ing. (FH) A. Wedmann

391 00A n

General note concerning the English translation:

This Calibration Certificate is written in German. In case of any conflict between the German language version and the English translation of it, the German version shall prevail.

Kalibriergegenstand
Calibration standard

Wellenbehaftetes Evolventen-Scanning-Normal
Involute waviness scanning measurement standard

Das wellenbehaftete Evolventen-Scanning-Normal verkörpert ein internes und ein externes Evolventenprofil mit überlagerter Welligkeit. Außerdem weist es Referenzflächen zur Festlegung von Bezugskreis und Bezugsebene auf. Eine hochgenaue Bohrung dient zur Festlegung der *x*-Achse.

The involute waviness scanning measurement standard embodies an internal and an external involute profile with superposed waviness. Moreover it is equipped with reference surfaces to determine a reference circle and a reference plane. A precise bore is used to define the x-axis.

Evolventenparameter:
Involute parameters:

	Interne Evolvente *internal involute*	Externe Evolvente *external involute*
Grundkreisradius *Radius of base circle*	20 mm	20 mm
Bereich der Evolventenfunktion inv(α) *Range of involute function inv(α)*	0°- 270°	0° - 200°

Wellenbehaftetes Evolventen-Scanning-Normal samt Auflagevorrichtung
Involute waviness scanning measurement standard with subbase

Kalibrierverfahren
Calibration procedure

Die beiden Profile des Normals wurden auf einem rückgeführten Koordinatenmessgerät kalibriert. Die einzelnen Messwerte wurden durch ein Mehrlagenmessverfahren ermittelt. Hierzu wurde das Normal in vier um 90° versetzten Stellungen mehrfach gemessen. Die Messergebnisse sind die gemittelten Werte aus allen Messungen.

The profiles of the measurement standard were calibrated on a coordinate measuring machine for which traceability has been proved. The individual measurement values were determined by a multiple orientation measurement procedure. For this purpose, the measurement standard was measured in four positions displaced by 90°. The measurement results are the averaged values from all measurements.

Bezüge
References

Die Bezugsseite des Normals ist durch die Gravur gekennzeichnet.
Die Referenzachse des Normals wurde numerisch ermittelt. Hierzu wurden am Normal ein Bezugskreis und ein Bezugsebene (siehe Skizze des Normals) gemessen. Der Mittelpunkt des Kreises und die Ebene wurden nach der Methode der kleinsten Fehlerquadrate ermittelt. Durch den Mittelpunkt des Bezugskreises und senkrecht zur Bezugsebene wurde die Referenzachse des Normals gelegt. Um das Koordinatensystem des Werkstückes festzulegen, wurde als *z*-Achse die Referenzachse verwendet. Die *x*-Richtungsbohrung wurde mit 36 Punkten gemessen und ihr Mittelpunkt nach der Methode der kleinsten Fehlerquadrate ermittelt. Durch diesen Mittelpunkt wurde die x-Achse gelegt.

The datum face of the measurement standard is marked by the engraving.
The reference axis of the measurement standard was numerically determined. For this purpose, a reference circle and a reference plane on the measurement standard (see sketch of the measurement standard) were measured and determined by least squares method. The reference axis of the measurement standard was fixed through the center of the reference circle and perpendicular to the reference plane. In order to determine the workpiece coordinate system the reference axis was fixed as z-axis. The x-direction reference bore was measured with 36 single points and its center determined by least squares method. By this center point the x-axis is defined.

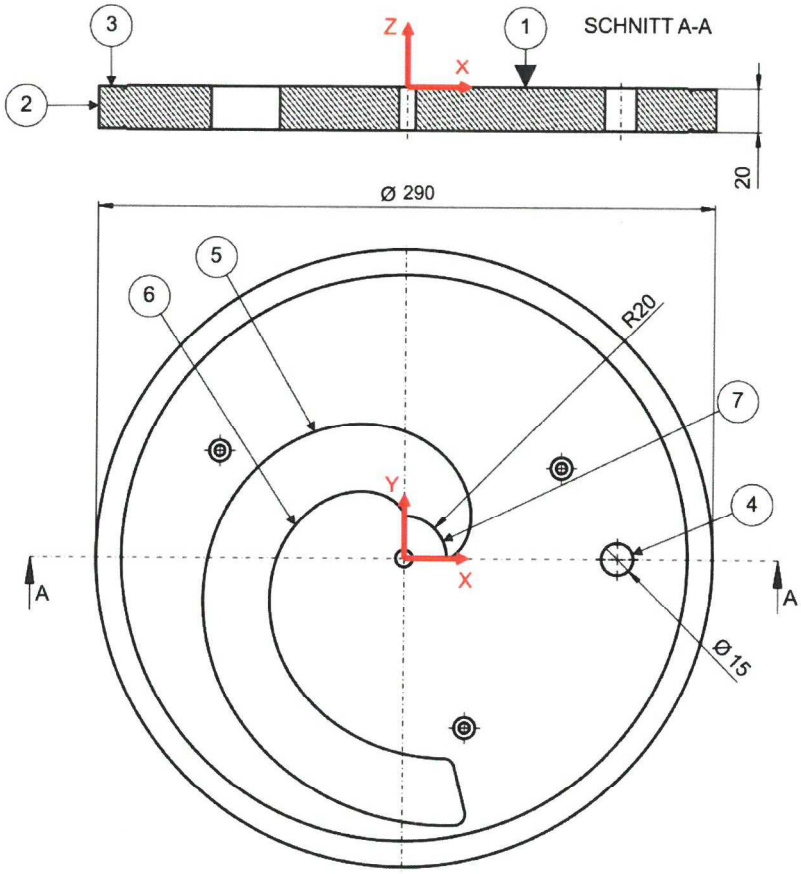

(1) Bezugsseite (Höhenbezug)
datum face (height reference)

(2) Bezugskreis
reference circle

(3) Bezugsebene
reference plane

(4) x-Richtungsbohrung
x-direction reference bore

(5) Internes Evolventenprofil
Internal involute profile

(6) Externes Evolventenprofil
External involute profile

(7) Grundkreisbogen mit Radius 20 mm
base circle arc with radius 20 mm

Skizze des Normals
Sketch of the measurement standard

Umgebungsbedingungen
Environmental conditions

Temperatur während der Messung *Temperature during the measurement*	(20 ± 0,2) °C

Normative Verweise
Normative references

Die Bezeichnung am Evolventennormal und die Auswertungen erfolgten, sofern nicht explizit anders beschrieben, unter Berücksichtigung der folgenden Richtlinien und Normen:

For identification and evaluations on the involute artifact the following guidelines and standards were taken into account unless otherwise explicitly noted:

ISO 1328-1, September 2013 (E);
VDI/VDE 2607, Februar 2000;
VDI/VDE 2612, Mai 2000;
DIN ISO 21771, August 2014;
DIN ISO 21772, Juli 2012;
DIN ISO 21773, August 2014;
DIN 3999, November 1974;

Messunsicherheit
Measurement uncertainty

Angegeben ist die erweiterte Messunsicherheit, die sich aus der Standardmessunsicherheit durch Multiplikation mit dem Erweiterungsfaktor $k = 2$ ergibt. Sie wurde gemäß dem „Guide to the Expression of Uncertainty in Measurement (GUM)“ ermittelt. Der Wert der Messgröße liegt dann im Regelfall mit einer Wahrscheinlichkeit von annähernd 95 % im zugeordneten Überdeckungsintervall.

The uncertainty stated is the expanded measurement uncertainty obtained by multiplying the standard measurement uncertainty by the coverage factor k = 2. It has been determined in accordance with the "Guide to the Expression of Uncertainty in Measurement (GUM)". The value of the measurand then normally lies with a probability of 95 % within the attributed coverage interval.

Messparameter
Measurement parameters

Die Messungen wurden auf der Grundlage der auf Seite 2 aufgelisteten und der folgenden Angaben durchgeführt:

The measurements were based on the parameters listed on page 2 with the following additional parameters:

Antastkugeldurchmesser *Stylus sphere diameter*	3 mm	
Punktedichte auf Wälzlänge *Point density on length of roll*	20 mm^{-1}	Scanning (v = 3 mm/s)
Lage des Profils (z-Wert) *Position of the profile (z-value)*	-10 mm	
Punkteanzahl für Bezugskreis *Number of points at reference circle*	1872	Scanning (v = 10 mm/s)
Punkteanzahl für Bezugsebene *Number of points at reference plane*	72	Einzelpunktantastung *Single point probing*
Punkteanzahl für x-Richtungsbohrung *Number of points at x-direction reference bore*	36	Scanning (v = 10 mm/s)

Ergebnisse Profil
Results profile

Aus den Messdaten wurden die Profile im Verhältnis zur Wälzlänge berechnet. Dazu wurde die theoretische Evolvente abgezogen und anschließend innerhalb der angegebenen Auswertebereiche die Profil-Gesamtabweichung F_α, Profil-Formabweichung $f_{f\alpha}$ und Profil-Winkelabweichung $f_{H\alpha}$ ermittelt.

From the measurement data the profiles have been calculated as function of length of roll. Therefore, the theoretical involute was substracted from the data. Then, within the evaluation ranges the total deviation F_α, the form deviation $f_{f\alpha}$ and the slope deviation $f_{H\alpha}$ have been determined.

Profil Auswertungsbereich
Profile evaluation range

	Interne Evolvente *Internal involute*	Externe Evolvente *External involute*
Start der Auswertung $L_{\alpha Start}$ (in Wälzlänge) *Start of evaluation $L_{\alpha Start}$ (length of roll)*	20 mm	20 mm
Ende der Auswertung $L_{\alpha End}$ (in Wälzlänge) *End of evaluation $L_{\alpha End}$ (length of roll)*	120 mm	90 mm

Ergebnisse Profil
Results profile

	Profil-Gesamtabweichung ***Total profile deviation***	**Profil-Formabweichung** ***Profile form deviation***	**Profil-Winkelabweichung** ***Profile slope deviation***
	F_α in µm	**$f_{f\alpha}$ in µm**	**$f_{H\alpha}$ in µm**
Int	[redacted] ± 1,0	[redacted] ± 1,0	[redacted] ± 0,7
Ext	[redacted] ± 1,0	[redacted] ± 1,0	[redacted] ± 0,8

Abkürzungen in der Tabelle: Int: Internes Evolventenprofil, Ext: Externes Evolventenprofil
Abbreviations in the table: Int: Internal involute profile, Ext: External involute profile

Diagramm
Diagram

Bei dem folgenden Diagramm zu den Profilergebnissen ist zu beachten, dass ein Diagramm aus den Mehrlagenmessungen ausgesucht wurde, das den Kalibrierwerten am nächsten kommt.

At the following diagram relating to the profile results please note that one diagram was selected from the multiple orientation measurement procedure which best approaches the calibrated values.

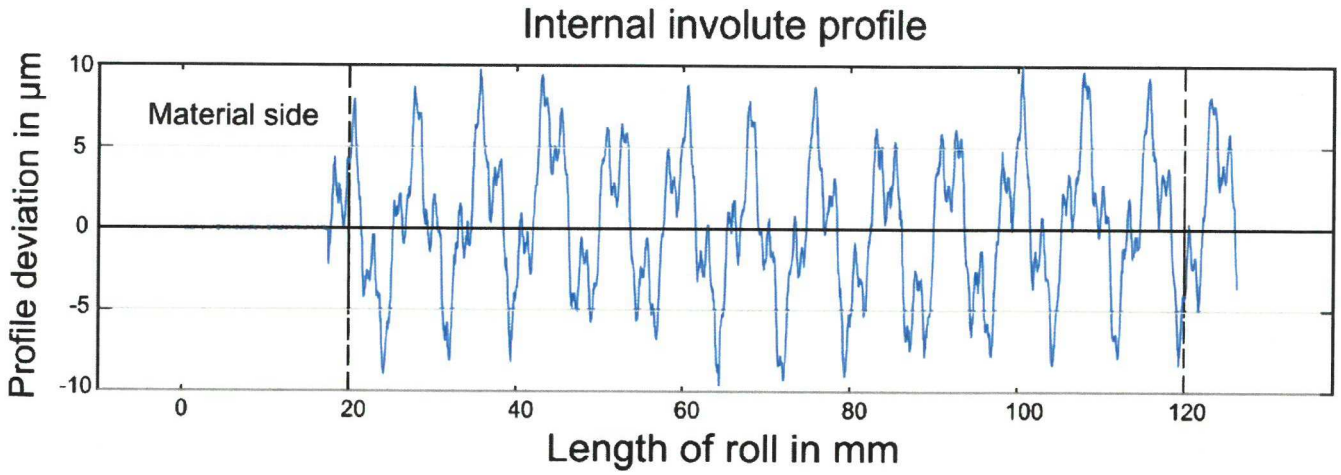

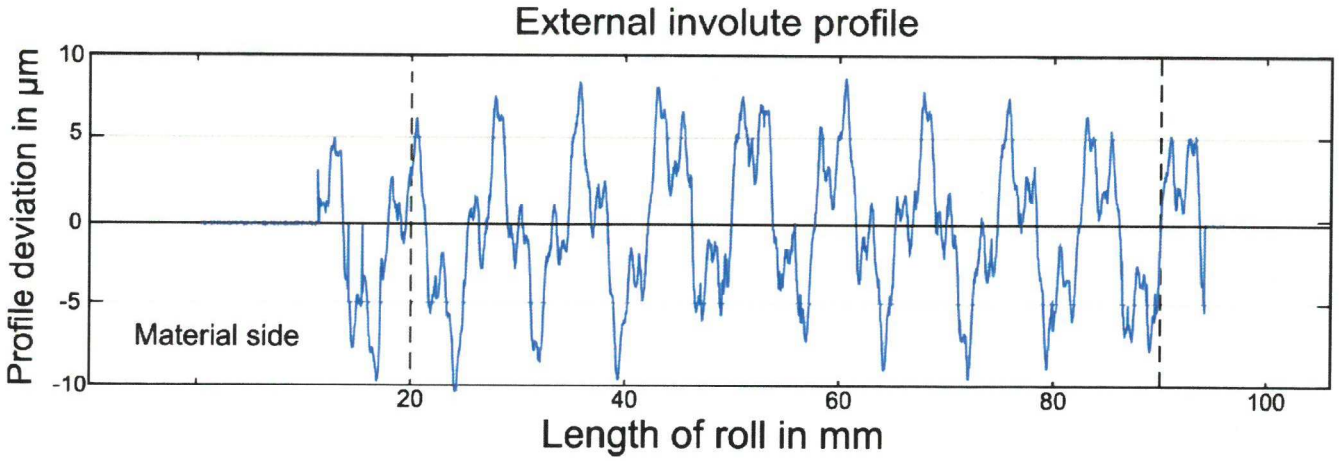

Spektrale Analyse
Spectral analysis

Mittels FFT (Fast Fourier Transform) wurde das Profil spektral analysiert. Aus dem transformierten Profil wurden die 3 größten Amplituden in dem angegeben Auswertebereich ermittelt.

The profile has been interpolated in order to obtain data with higher point density. The profile has been spectral analysed with FFT method (Fast Fourier Transformation). The three largest amplitudes within the evaluation range have been determined.

Parameter für spektrale Analyse:
Parameters for spectral analysis:

Auswertebereich Wellenlänge *Evaluation range wavelength*	0,77 mm - 20 mm

Ergebnisse spektrale Analyse
Results spectral analysis

Wellenlänge in mm ***Wavelength in mm***	**Amplitude in µm** ***Amplitude in µm***
Int	
[redacted] ± 0,001	[redacted] ± 0,1
[redacted] ± 0,001	[redacted] ± 0,1
[redacted] ± 0,001	[redacted] ± 0,1
Ext	
[redacted] ± 0,001	[redacted] ± 0,1
[redacted] ± 0,001	[redacted] ± 0,1
[redacted] ± 0,001	[redacted] ± 0,1

Abkürzungen in der Tabelle: Int: Internes Evolventenprofil, Ext: Externes Evolventenprofil
Abbreviations in the table: Int: Internal involute profile, Ext: External involute profile

Diagramm
Diagram

Bei dem folgenden Diagramm zu den Ergebnissen der spektralen Analyse ist zu beachten, dass ein Diagramm aus der FFT Analyse ausgesucht wurde, das den Kalibrierwerten am nächsten kommt.

At the following diagram relating to the results of spectral analysis please note that one diagram was selected from the FFT analysis which best approaches the calibrated values.

FFT for internal involute profile

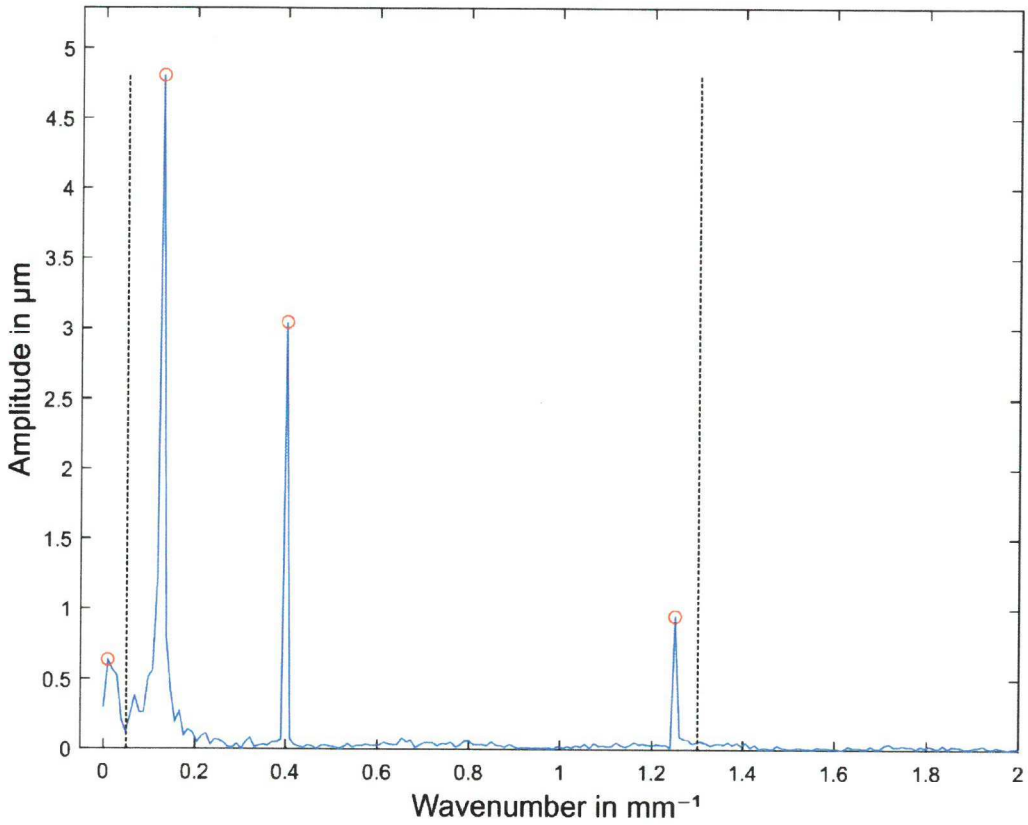

FFT for external involute profile

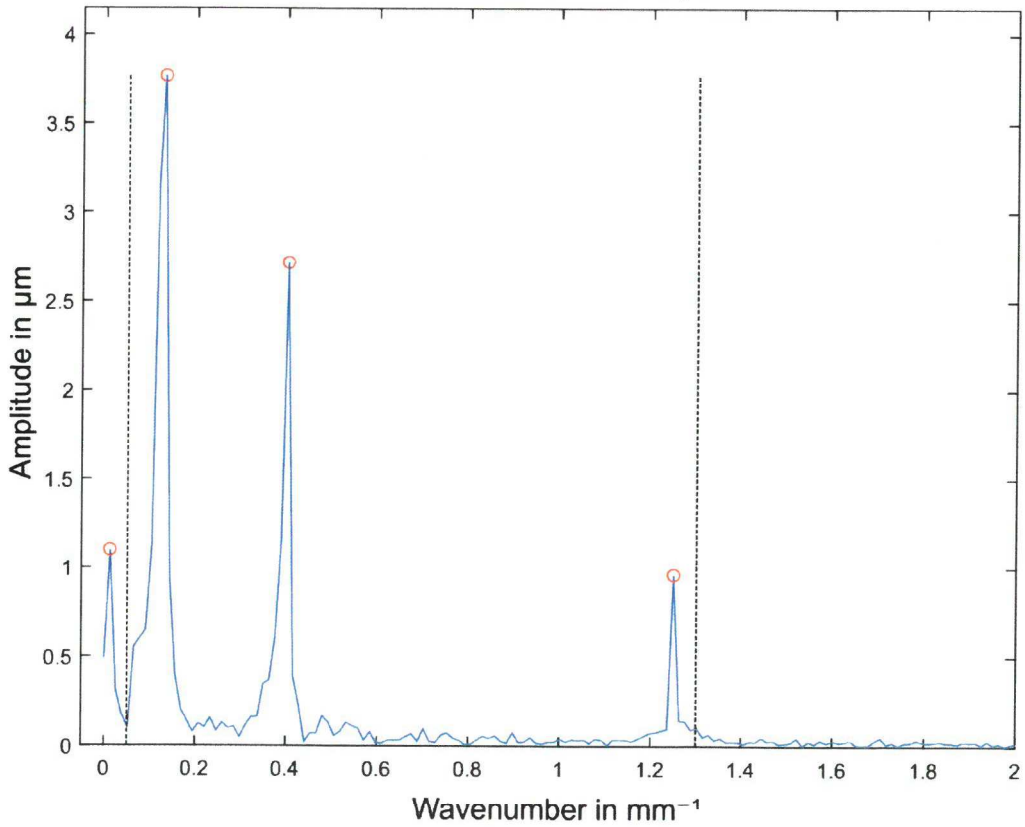

Die Physikalisch-Technische Bundesanstalt (PTB) in Braunschweig und Berlin ist das nationale Metrologieinstitut und die technische Oberbehörde der Bundesrepublik Deutschland für das Messwesen. Die PTB gehört zum Geschäftsbereich des Bundesministeriums für Wirtschaft und Energie. Sie erfüllt die Anforderungen an Kalibrier- und Prüflaboratorien auf der Grundlage der DIN EN ISO/IEC 17025.

Zentrale Aufgabe der PTB ist es, die gesetzlichen Einheiten in Übereinstimmung mit dem Internationalen Einheitensystem (SI) darzustellen, zu bewahren und weiterzugeben. Die PTB steht damit an oberster Stelle der metrologischen Hierarchie in Deutschland. Die Kalibrierscheine der PTB dokumentieren eine auf nationale Normale rückgeführte Kalibrierung.

Zur Sicherstellung der weltweiten Einheitlichkeit der Maßeinheiten arbeitet die PTB mit anderen nationalen metrologischen Instituten auf regionaler europäischer Ebene in EURAMET und auf internationaler Ebene im Rahmen der Meterkonvention zusammen. Dieses Ziel wird durch einen intensiven Austausch von Forschungsergebnissen und durch umfangreiche internationale Vergleichsmessungen erreicht.

The Physikalisch-Technische Bundesanstalt *(PTB) in Braunschweig and Berlin is the National Metrology Institute and the supreme technical authority of the Federal Republic of Germany for metrology. The PTB comes under the auspices of the Federal Ministry of Economics and Energy. It meets the requirements for calibration and testing laboratories as defined in DIN EN ISO/IEC 17025.*

The central task of PTB is to realize, to maintain and to disseminate the legal units in compliance with the International System of Units (SI). PTB thus is at the top of the metrological hierarchy in Germany. The calibration certificates issued by PTB document a calibration traceable to national measurement standards.

PTB cooperates with other national metrology institutes - at the regional European level within EURAMET and at the international level within the framework of the Metre Convention - with the aim of ensuring the worldwide coherence of the measurement units. This aim is achieved by an intensive exchange of the results of research work and by comprehensive international comparison measurements.

Annex C - T.R. 17/2017:

Eccentricity correction and calculation of the profile deviation parameters ($f_{H\alpha}$, $f_{f\alpha}$ and F_α) of the standard involutes (SAFT 2W): procedure and formulary

The procedure is synthetically articulated in the following steps:

1. Determination of the components of the polar eccentricity vector $\bar{e}$ by means of the Microsoft Excel built-in optimization tool "*Solver*" in the best scanning conditions (v = 2 mm s^{-1}, stylus length = 35 mm), averaging the obtained values among the 3 different workpiece orientation (0°, 90° and 210°).
2. Creation of an OriginLab Origin batch working on the suitable roll length ranges for both external and internal involute profiles to generate, for all the scanning conditions (combinations of 5 variable speeds, 3 stylus lengths and 3 workpiece orientations), the following ordered quantities:
   a. the **eccentric coordinates** X_{ecc} and Y_{ecc} of an arbitrary point on the involute profile by correction of the the CMM acquired points with the previously calculated $\bar{e}$ components (e_x and e_y);
   b. the **module of the position vector** of the same point: $\rho_{ecc} = \sqrt{X_{ecc}^2 + Y_{ecc}^2}$;
   c. the **"eccentric" anomaly**: $\varphi_{ecc} = arctan\left(\frac{Y_{ecc}}{X_{ecc}}\right)$;
   d. the **roll angle**: $\theta_{ecc} = \varphi_{ecc} + arccos\left(\frac{R_b}{\rho_{ecc}}\right)$, where R_b = base radius;
   e. the "**observed" roll length**: $l_{obs} = \sqrt{\rho_{ecc}^2 - R_b^2} \pm R_p$ (being R_p = radius of the probe tip, the "+" sign for the internal involute profile and the "–" sign for the external involute profile);
   f. the "**expected" roll lenght**: $l_{exp} = R_b \theta_{ecc}$;
   g. the difference between the observed and the expected roll length, that is the **profile deviation** Δ_l .
3. Performance of linear regressions on the Δ_l vectors of data, so that the obtained slopes define the $\boldsymbol{f_{H\alpha}}$ parameter. The other profile parameters are calculated in the following way: being *residuals = difference between regression line and profile deviation for each experimental point*, $\boldsymbol{f_{f\alpha}} = max(residuals) - min(residuals)$; $\boldsymbol{F_\alpha} = max(\Delta_l) - min(\Delta_l)$.