Accurate force and moment measurement in spring testing machines by an integrated hexapod-shaped multicomponent force transducer

Accurate force and moment measurement in spring testing machines by an integrated Hexapod-Shaped Multicomponent Force Transducer

Gianfranco Genta[1,*], Andrea Prato[2], Fabrizio Mazzoleni[2], Alessandro Germak[2], Maurizio Galetto[1]

[1]Department of Management and Production Engineering, Politecnico di Torino, Corso Duca degli Abruzzi 24, 10129 Torino, Italy
[2]Mechanics Division, Istituto Nazionale di Ricerca Metrologica (INRiM), Strada delle Cacce 91, 10135 Torino, Italy

[*]E-mail: gianfranco.genta@polito.it

Abstract. In spring testing machines, measurement of transversal forces and bending/torsion moments, beside vertical force, is crucial for spring characterization. For this purpose, the more advanced industrial machines are typically equipped with Multicomponent Force Transducers (MFTs), composed by different sensors each one dedicated to a single force component. However, such assembled MTFs present unsolved technical problems, i.e. moment measurements are not performed and the periodic calibration is hard to manage. To overcome these problems, a Hexapod-Shaped MFT was devised and integrated in a new model of industrial spring testing machine, thus enabling simple periodic calibrations and ensuring measurement traceability, besides measuring the moment components. The present work deals with the performance evaluation and metrological validation of the system.

Keywords: force, moment, multicomponent transducer, spring testing machine, periodic calibration

1. Introduction

In engineering industry, spring testing machines are widely used. Specifically, in case of railway industry, the standard EN 13298 requires to test the helical springs used in carriage suspensions [1]. These springs are usually checked on large capacity testing machines, relying upon hydraulic or mechanical devices for force generation. In order to characterize helical springs, it is crucial to measure not only the vertical force, but also transversal forces and bending and torsion moments. In railway engineering practice, helical springs are assembled and oriented in carriage suspension, aiming at offsetting transverse displacement by producing, under deflection, transverse forces opposing each other. In particular, spring deflection under axial load entails both vertical and transverse components, causing forces and displacements. It is worth noting that the transverse displacement under axial load is typically indicated by the French term “Chasse” [2,3], see Fig. 1.

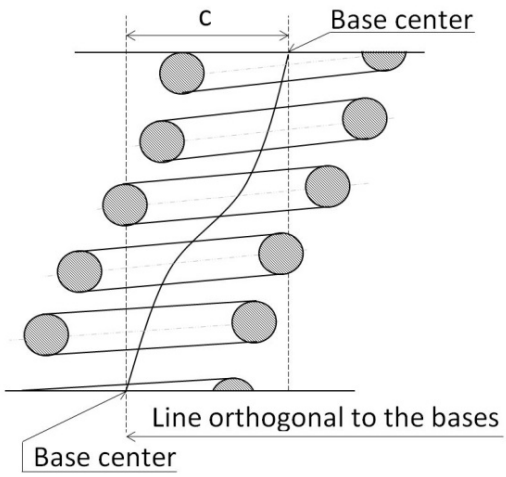

Figure 1. "Chasse" C defined as transverse displacement under axial load.

Furthermore, technical specifications of helical springs have to provide nominal values of both axial and transverse stiffness together with the relevant tolerances, as required by the standard [1]. A device is therefore required, capable of measuring modulus and direction of both axial and transverse force. For this purpose Multicomponent Force Transducers (MFTs) are typically used. They are composed of multi-transducers, each one dedicated to a specific force component (transversal or vertical). Such assembled transducers present some technical problems, like friction or bending of the coupling points, and do not allow, normally, measurements of bending/torsion moments, whose measure is not considered in the EN 13298 standard but could provide more information about spring mechanical properties. In addition,

calibration of traditional MFTs is challenging, since the generation of transversal forces, which entails high uncertainties and is time-consuming [4,5], is needed. This activity involves many efforts during the first installation and characterization, and it is hard to carry out for subsequent periodic calibrations, which are requested by standards for Quality Management Systems [6]. Therefore, the traceability to force primary standards is not guaranteed over time and spring axial and transverse stiffness cannot be accurately evaluated.

To overcome these limits, INRiM developed a Hexapod-Shaped (HS) MFT [3,7], composed of six Uniaxial Force Transducers (UFTs). Such a structure, typical of six degrees of freedom displacement devices (Stewart platforms [8]), was previously exploited on the field only for low loads, e.g. in robotics [9,10,11,12,13]. In the present paper, the HS MFT, integrated in a spring testing machine, is used for the first time for industrial measurements to test springs. Even if a three component MFT, capable of measuring the three forces (F_x, F_y, F_z), would be enough, the further knowledge of the three moments (M_x, M_y, M_z) offers other substantial advantages, in terms of better identification of calibration equations and better measurement accuracy.

Hexapod-shaped structure enables the simultaneous measurement of the three force and three moment components by combining, on the basis of the geometry, the outputs of the UFTs. Therefore, on the contrary to the traditional MFTs, the periodic calibration of the HS MFT together with its UFTs requires only the application of the vertical force, as prescribed by ISO 376 [14]. With such calibration, besides reducing the time duration, it is possible to ensure measurement traceability for all force and moment components over time, since the geometry of the hexapod is not subject to significant changes.

The aim of the present paper is to analyse the working principle of the HS MFT and discuss the results of the performance evaluation and metrological validation tests performed on the system.

More in detail, the paper is organized as follows. Section 2 describes the measurement setup, i.e. the HS MFT and its integration in an industrial spring testing machine, introducing also the mathematical models characterizing measurements performed with the HS MFT. Section 3 describes the calibration and the measurements performed on the industrial spring testing machine; an uncertainty evaluation is also performed in order to validate the measurement system. Section 4 presents some concluding remarks.

2. Measurement setup

2.1. Hexapod-Shaped MFT

The geometry of the used HS MFT is shown in Fig. 2. The system has an axial and transverse force capacity of 400 kN and 104 kN (at 45° with respect to *x-y* axis) respectively. It is composed by 6 UFTs with rated loads of 75 kN. Its diameter and height are 586 mm and 400 mm respectively, and the weight is in the order of 400 kg. Due to dimensional limits, it was not possible to connect two UFTs to the same point; so, each pair of UFTs forms a trapezoid, instead of a triangle. Each UFT works in traction, and not in compression, therefore it was necessary to design an inversion frame, in order to put in traction all the UFTs. Three internal columns transfer the load, applied on the upper loading pad, to the lower plate, where the lower clamping heads of the UFTs are fixed at a distance r of 218 mm from the centre. The upper clamping heads of the UFTs are instead fixed to the upper plate, which is supported by the base through other three external columns. The upper and lower frames are separated by a gap of a few millimetres in order to avoid any contact and friction during the load application. UFTs are inclined with respect to the horizontal plane in order to simultaneously measure force and moment components and to enable their continuous re-orientation, thus avoiding spurious components. The re-orientation is allowed by a couple of elastic hinges fixed at both ends of each UFT. α, β, γ and δ angles are 55°, 62.5°, 60° and 30° respectively.

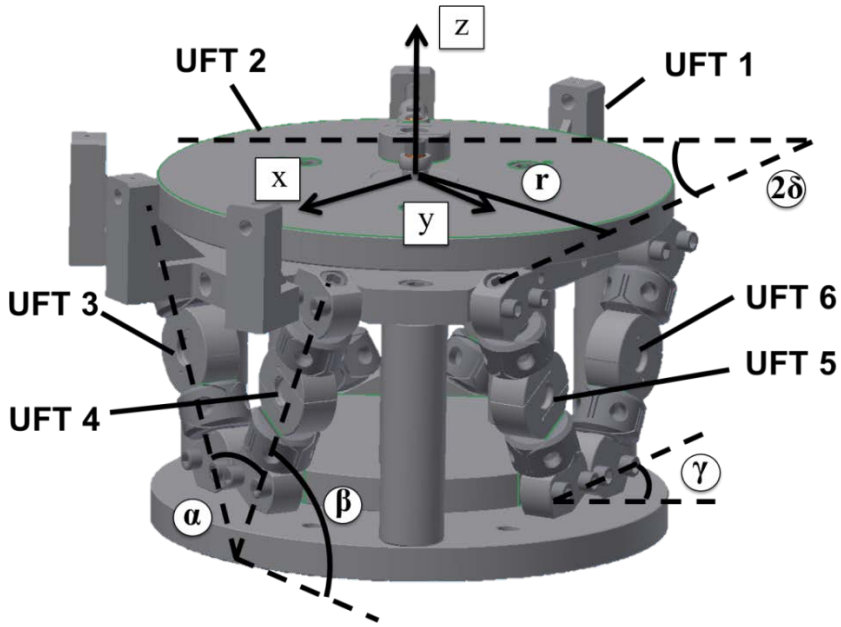

Figure 2. Geometry of the 400 kN HS MFT.

2.2. Spring testing machine equipped with the Hexapod-Shaped MFT

The HS MFT has been integrated in an industrial compression-testing machine for railway springs (*Aura Chasse* from the company *Easydur Italiana*, Arcisate, Italy). The whole system is shown in Fig. 3. Applied vertical loads can reach a maximum of 200 kN. The machine is equipped with a "Chasse" test device, composed of a lower digitalised XY bench with a resolution of 0.01 mm. Springs under tests are mounted between the load frame and the upper plate of the HS MFT, which are flat and parallel. During the test, the HS MFT is fixed to the base of the spring testing machine through a steel bar. Springs are placed upon the upper plate of the HS MFT and manually centred. Springs are kept coaxial with the HS MFT during the test, and possible shifts are negligible due to high friction between the two contact surfaces. UFTs outputs (F_i, i=1...6) are connected to an external interface, which acquires data at 1 kHz.

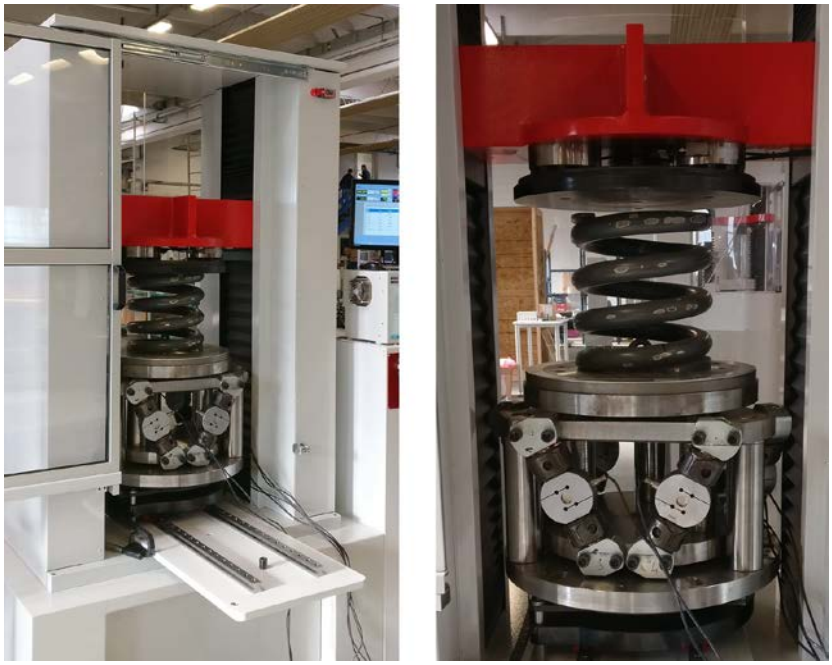

Figure 3. The 400 kN HS MFT integrated in the *Easydur Aura Chasse* railway spring testing machine.

2.3. *Mathematical model of the Hexapod-Shaped MFT*

The measurements of the three forces (F_x, F_y, F_z) and the three moments (M_x, M_y, M_z) are obtained by combining the outputs F_i of each UFT, basing on the geometry of the HS MFT (see Fig. 2). Therefore, formulas include the radius r and the angles α, β, γ and δ described in Section 2.1. The following system of equations is obtained:

$$\begin{cases} F_x = (F_1 - F_2 - F_5 + F_6) \cdot \cos\beta \cdot \cos\delta \\ F_y = (F_4 - F_3) \cdot \cos\beta + (F_1 - F_2 + F_5 - F_6) \cdot \cos\beta \cdot \cos\gamma \\ F_z = (F_1 + F_2 + F_3 + F_4 + F_5 + F_6) \cdot \cos\frac{\alpha}{2} \\ M_x = (F_1 + F_2 - F_5 - F_6) \cdot r \cdot \cos\frac{\alpha}{2} \cdot \cos\delta \\ M_y = (F_4 + F_3) \cdot r \cdot \cos\frac{\alpha}{2} - (F_1 + F_2 + F_5 + F_6) \cdot r \cdot \cos\frac{\alpha}{2} \cdot \sin\delta \\ M_z = (F_1 - F_2 + F_3 - F_4 + F_5 - F_6) \cdot r \cdot \cos\beta \end{cases} \tag{1}$$

3. Experimental tests

3.1. *First and periodic calibrations*

The first calibration of the HS MFT starts with the calibration of the single 75 kN UFTs in the primary dead-weight force standard machine. The calibration procedure conforms to ISO 376 [14] and is composed of four phases: two loading phases at initial position (indicated as 0°), with only incremental force values, and two other loading phases with relative rotation of the position (approximately 120° and 240°) with incremented and decremented force values. Obtained values are then evaluated fitting the calibration data with a second order polynomial regression equation. Every single UFT classified in class 00 has its respective third order polynomial fitting equation that is used to convert the signal output into a force signal.

UFTs are then assembled in the HS MFT and vertical force measurements are performed up to 300 kN in order to evaluate the deviations of the measured vertical forces F_z (Eq. (1)) from the nominal force generated by the primary force standard machine. The maximum value of 300 kN, instead of 400 kN, is due to the fact that in railway spring tests higher loads are not necessary. To correct systematic errors, measured vertical force values are then fitted by a second order polynomial regression, thus obtaining the correction equation.

Subsequently, periodic calibrations, typically every 24 months, can be performed within an industrial compression force machine by comparison with a reference UFT according to ISO 376, by considering the whole HS MFT under calibration as a single UFT. In the industrial compression force machine, vertical forces up to 300 kN are generated and measured by a reference UFT located above the HS MFT upper plate. Considering an equal distribution of the generated reference vertical force upon the six UFTs of the HS MFT, it is possible to get the third order polynomial calibration equations of the six UFTs. The advantage of HS MFT is that, generating the simple vertical force, it is possible to calibrate each single UFT without dismantling the HS MFT every time. Such procedure also allows avoiding the generation of reference transverse forces and moments, which are difficult to manage and increase the calibration uncertainty, needed for the calibration of the traditional MFTs, which are composed of different sensors each one dedicated to a single force component. Another advantage of the periodic calibration is that the correction equation of the first calibration is negligible since systematic effects are directly compensated into the calibration equations of the single UFTs.

In the present analysis, the calibration of the single UFTs was performed in the primary force standard machine of INRiM. The maximum relative expanded uncertainty (at 95% confidence level) of the six calibrations was $6 \cdot 10^{-4}$. Afterwards, considering the UFTs assembled in the HS MFT, systematic differences were registered between the measured vertical forces F_z and the nominal force generated by the primary force standard machine. These differences were present with a maximum percentage deviation of 0.55%. For

this reason, measured vertical force values were fitted by a second order polynomial, which represents the correction equation. Maximum percentage deviation from nominal value was thus reduced to 0.04%.
In the present study, tests on the spring testing machine were performed within 24 month from the first calibration; therefore no periodic calibration was needed.

3.2. Tests performed on the spring testing machine

As mentioned in Section 2.2, the HS MFT was integrated in the *Easydur Aura Chasse* industrial spring testing machine. Force and displacement measurements were carried out according to EN 13298 [1] at *Easydur Lab* on a typical alloy steel (52SiCrNi5) helical railway spring provided by the company *Mollificio Legnanese* (Legnano, Italy). These tests were aimed at validating the measurement system by comparing empirical axial and transverse stiffness with the nominal values. The spring has an outer diameter (i.e. width) of 283 mm, a free length (i.e. height) of 308 mm and a steel bar diameter of 43 mm. Nominal values of axial and transverse stiffness are 0.702 kN/mm and 0.597 kN/mm, respectively. Room temperature during measurements ranged from 14 °C to 16 °C.
Three repeated tests were performed considering four different positions of the HS MFT: with respect to the original positioning, three subsequent rotations of 90° were performed. Tests were realized for two typical spring lengths of railway carriage suspensions, i.e. 290 mm and 220 mm, which correspond to axial loads of around 10.2 kN and 60.4 kN, respectively. These axial (vertical) loads were monitored during the experiment by a force transducer mounted in the spring testing machine. Vertical displacement was monitored by a displacement transducer also included in the machine. Measurement of the three forces (F_x, F_y, F_z) and the three moments (M_x, M_y, M_z) with the HS MFT was performed by the "Chasse" lower XY bench fixed, while transverse displacement measurements were realized by the XY bench free to move. Experimental data are shown in Table 1.

Table 1. Measurements performed on the *Easydur Aura Chasse* spring testing machine.

Angle / °	Spring length / mm	Axial load / kN	F_x / kN	F_y / kN	F_z / kN	M_x / kN·m	M_y / kN·m	M_z / kN·m	x / mm	y / mm
0	290	10.195	0.723	1.013	10.118	-0.686	0.436	0.012	1.32	1.67
0	220	60.483	-0.235	-3.089	60.479	1.664	-0.453	0.195	-2.02	-5.62
90	290	10.171	-0.904	0.671	10.197	-0.333	-0.633	0.009	-1.71	1.06
90	220	60.483	3.489	-0.340	60.350	0.596	1.853	0.217	5.53	-1.60
180	290	10.171	-0.510	-0.933	10.222	0.701	-0.284	0.005	-1.32	-1.78
180	220	60.460	0.493	3.130	60.303	-1.500	0.594	0.202	2.05	5.24
270	290	10.210	1.045	-0.608	10.220	0.351	0.776	0.009	1.96	-1.40
270	220	60.388	-3.107	0.114	60.421	-0.304	-1.349	0.187	-5.61	1.38

It is worth noting that F_z measurements performed with the HS MFT are consistent with the axial loads imposed by the spring testing machine. Bending and torsion moment measurements are reported to show typical spring moment values, but they are useless for the metrological validation since moment nominal values were not provided by the spring manufacturer. Basing on experimental data, axial and transverse stiffness were calculated, according to the following equation [1]:

$$\begin{cases} K_z = \dfrac{F_{z,220\text{mm}} - F_{z,290\text{mm}}}{290\text{ mm} - 220\text{ mm}} \\ K_x = \dfrac{F_x}{x} \\ K_y = \dfrac{F_y}{y} \end{cases} \tag{2}$$

Empirical values of axial and transverse stiffness, obtained from data of Table 1, are shown in Table 2. Some values of transverse stiffness are immediately identified as outliers and excluded from the analysis. These outliers are due to the imperfect centring of the spring on the testing machine. In fact, this operation was performed manually by the operator.

Table 2. Empirical values of axial and transverse stiffness. Values marked with asterisks are excluded as outliers due to manual centring errors.

Angle / °	**K_z / kN/mm**	**K_x / kN/mm**	**K_y / kN/mm**
0		0.548	0.606
	0.719		
0		0.116*	0.550
90		0.529	0.633
	0.716		
90		0.631	0.212*
180		0.387	0.524
	0.715		
180		0.240*	0.597
270		0.533	0.434
	0.717		
270		0.554	0.083*

3.3. Uncertainty budget and metrological validation

A comprehensive uncertainty evaluation was performed according to GUM [15] for different situations.

As a first step, the calibration uncertainty of the whole HS MFT in the primary dead-weight force standard machine was assessed for vertical forces F_z up to 300 kN by referring to Eq. (1). For the outputs F_i, the resolution of the UFTs, the bias of the UFTs and the bias component relevant to HS MFT, described in Section 3.1, were taken into account. For the geometrical parameters, the design tolerances were considered. Maximum calibration expanded uncertainties (at 95% confidence level) are 0.16 kN for transverse forces F_x and F_y, 0.43 kN for vertical force F_z, 0.07 kN·m for M_x, 0.10 kN·m for M_y, and 0.05 kN·m for M_z.

As a second step, the uncertainty budget of force and moment measurements performed on the railway spring with the HS MFT integrated in the spring testing machine, previously shown in Table 1, is considered. In addition to the above described force calibration uncertainty, reproducibility of force and moment measurements was taken into account. Maximum expanded uncertainties (at 95% confidence level) are 0.28 kN for F_x, 0.20 kN for F_y, 0.76 kN for vertical force F_z, 0.12 kN·m for M_x and M_y moment components, and 0.09 kN·m for M_z.

As a third step, the uncertainties of axial and transverse stiffness measurements (see Eq. (2)) in the spring testing machine were evaluated. In addition to the previous uncertainties, uncertainty of displacement

measurements was taken into account. Overall uncertainties of axial and transverse stiffness are shown in Table 3 together with the corresponding mean values obtained from Table 2.

Table 3. Experimental axial and transverse stiffness mean values, expanded uncertainties and relative expanded uncertainties (at 95% confidence level).

Variable	Mean value / kN/mm	Expanded uncertainty / kN/mm	Relative expanded uncertainty
K_z	0.717	0.015	2%
K_x	0.530	0.092	17%
K_y	0.557	0.070	13%

As a final step, the experimental uncertainty intervals of axial and transverse stiffness are compared with the corresponding tolerance intervals (±5% and ±15%, respectively [1]), as shown in Fig. 4. It is observed that experimental uncertainty interval of K_z is narrower than the corresponding tolerance interval, whereas those related to K_x and K_y are comparable with the corresponding tolerance intervals. However, the three experimental stiffness mean values are compatible with the corresponding nominal values. These results allow to experimentally validating the measurement system.

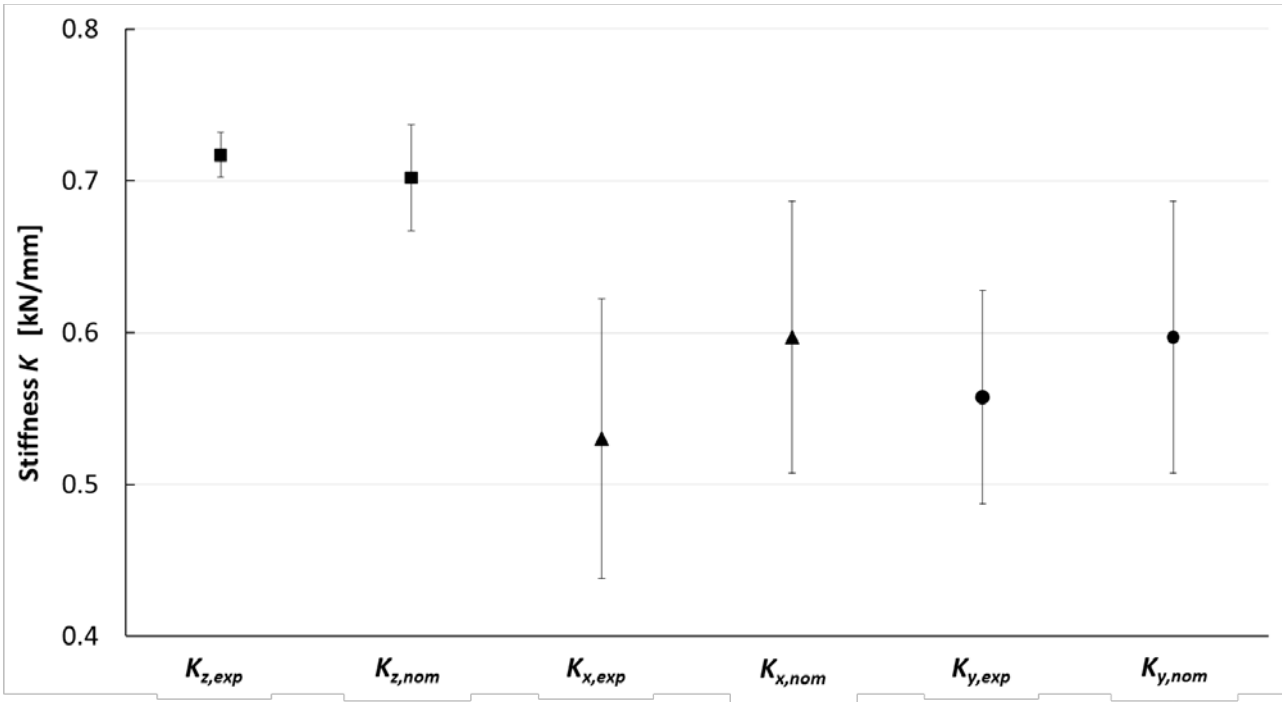

Figure 4. Experimental uncertainty intervals (at 95% confidence level) of K_z, K_x and K_y compared with the corresponding tolerance intervals. “Exp” and “nom” corresponds to “experimental” and “nominal”.

4. Conclusions

In railway industry, the helical springs used in carriage suspensions need to be tested according to the standard EN 13298 [1]. These springs are generally tested on large capacity spring testing machines measuring the vertical and transversal forces, which are crucial for the evaluation of spring axial and transverse stiffness, as required by the standard. For this purpose, MFTs are normally used. However, the required periodic calibration of these transducers is hard to manage, thus the traceability over time is not

guaranteed and spring axial and transverse stiffness cannot be accurately evaluated. Furthermore, since MFTs are composed of different UFTs each one dedicated to a single force component, measurements of bending/torsion moments, which could provide a more accurate characterization of springs, are normally not possible. For this reason, a 400 kN Hexapod-Shaped MFT was devised and integrated in a new model of industrial spring testing machine. Such transducer allows the simultaneous measurement of the three forces and the three moments by combining the outputs of the six UFTs of the HS MFT, basing on its geometry. This solution enables simple periodic calibrations, which require only the application of the vertical force, and ensures measurement traceability, thus overcoming the drawbacks of common MFTs.

Several measurements were carried out on a typical railway spring in order to validate the measurement system. Experimental mean values and uncertainty intervals of axial and transverse stiffness were compared with the corresponding nominal values and tolerance intervals. The compatibility of obtained results allows to experimentally validating the measurement system.

Nevertheless, experimental measurements evidenced problems linked to the manual centring of the spring on the testing machine. Future research will be aimed to equip the industrial spring testing machines with an automatic centring system.

Acknowledgments

The authors would like to thank Renato Affri, Stefano Piazza and Luca Candia from the company *Easydur Italiana* for the use of their railway spring testing machine and for their willingness during measurements.

References

[1] EN 13298:2003, *Railway Applications - Suspension Components - Helical Suspension Springs, Steel*, European Committee for Standardization, Brussels, Belgium.

[2] Specifica Trenitalia n. 307625 esp. 05, 2010, *Specifica Tecnica di Fornitura di Molle ad Elica per Sospensioni di Rotabili Ferroviari (in Italian)*, Trenitalia, Rome, Italy.

[3] Genta G, Germak A, Barbato G, Levi R, 2016, Metrological Characterization of an Hexapod-Shaped Multicomponent Force Transducer, *Measurement* 78:202-206.

[4] Barbato G, Bray A, Germak A and Levi R, 1986, Calibration and Verification of Multicomponent Dynamometers in the Meganewton Range, *Proceedings of the XIth International Conference on Measurement of Force and Mass*, 12-16 May 1986, Amsterdam, The Netherlands, 257-267.

[5] Nitsche J, Baumgarten S, Petz M, Röske D, Kumme R and Tutsch R, 2017, Measurement Uncertainty Evaluation of a Hexapod-Structured Calibration Device for Multi-Component Force and Moment Sensors, *Metrologia* 54/2:171–183.

[6] ISO 9001:2015, *Quality Management Systems – Requirements, International Organization for Standardization*, Geneva, Switzerland.

[7] Palumbo S, Germak A, Mazzoleni F, Desogus S and Barbato G, 2016, Design and Metrological Evaluation of the New 5 MN Hexapod-Shaped Multicomponent Build-Up System, *Metrologia* 53/3:956–964.

[8] Stewart D, 1965, A Platform with Six Degrees of Freedom, *Proceedings of the Institution of Mechanical Engineers* 180/1:371-386.

[9] Sorli M and Pastorelli S, 1995, Six-Axis Reticulated Structure Force/Torque Sensor with Adaptable Performances, *Mechatronics* 5/6:585–601.

[10] Dai JS and Kerr DR 2000, A Six-Component Contact Force Measurement Device Based on the Stewart Platform, *Proceedings of the Institution of Mechanical Engineers, Part C: Journal of Mechanical Engineering Science* 214/5:687-697.

[11] Dwarakanath TA, Dasgupta B and Mruthyunjaya TS, 2001, Design and Development of a Stewart Platform Based Force–Torque Sensor, *Mechatronics* 11/7:793-809.

[12] Hou Y, Yao J, Lu L and Zhao Y, 2009, Performance Analysis and Comprehensive Index Optimization of a New Configuration of Stewart Six-Component Force Sensor, *Mechanism and Machine Theory* 44/2:359–368.

[13] Schwind D, 2010, Multicomponent-Transducers: Definition, Construction Types and Calibration Considerations, *Proceedings of 21st IMEKO 2010 TC3, TC5 and TC22 Conferences: Metrology in Modern Context*, 22−25 November 2010, Pattaya, Thailand, 307-308.

[14] ISO 376:2011, *Metallic Materials -- Calibration of Force-Proving Instruments Used for the Verification of Uniaxial Testing Machines*, International Organization for Standardization, Geneva, Switzerland.

[15] JCGM 100:2008, *Evaluation of Measurement Data — Guide to the Expression of Uncertainty in Measurement (GUM)*, Joint Committee for Guides in Metrology, Sèvres, France.