METRICA
METRology Institutional CAtalog

ISTITUTO NAZIONALE DI RICERCA METROLOGICA
Repository Istituzionale

Experimental analysis of the thermal behavior of a GM cryocooler based on linear system theory

Original
Experimental analysis of the thermal behavior of a GM cryocooler based on linear system theory / Sosso, A.; Durandetto, P.. - In: INTERNATIONAL JOURNAL OF REFRIGERATION. - ISSN 0140-7007. - 92:(2018), pp. 125-132. [10.1016/j.ijrefrig.2018.04.016]

Availability:
This version is available at: 11696/65659 since: 2021-01-27T16:22:35Z

Publisher:
Elsevier

Published
DOI:10.1016/j.ijrefrig.2018.04.016

Terms of use:

This article is made available under terms and conditions as specified in the corresponding bibliographic description in the repository

Publisher copyright

(Article begins on next page)

26 April 2024

International Journal of Refrigeration 92 (2018) 125–132

Contents lists available at ScienceDirect

International Journal of Refrigeration

journal homepage: www.elsevier.com/locate/ijrefrig

Experimental analysis of the thermal behavior of a GM cryocooler based on linear system theory

A. Sosso*, P. Durandetto

I.N.Ri.M.-Istituto Nazionale di Ricerca Metrologica, Strada delle Cacce, Torino 91 - 10135, Italy

ARTICLE INFO

Article history:
Received 12 January 2018
Revised 13 April 2018
Accepted 17 April 2018
Available online 3 May 2018

Keywords:
Cryocoolers
Thermal analysis
Thermal control
Linear systems
Thermal impedance
Dynamic load

ABSTRACT

Closed cycle refrigerators for cryogenic temperatures (cryocoolers) provide a convenient solution in a wide range of applications, from low temperature physics to cryopumping, superconducting magnets or low noise infrared sensing. Understanding in detail the physical mechanisms underlying cryocooler operation is then of practical and fundamental interest. This paper deals with the analysis as a linear dynamical system of a GM cryocooler operation, considered over a limited range of temperature around a setpoint. The method is interesting as a way to model the thermal behavior of the refrigerator that can be effective in systematic analysis of cryocoolers thermal behaviour and design of temperature controllers.

© 2018 The Author(s). Published by Elsevier Ltd.
This is an open access article under the CC BY-NC-ND license.
(http://creativecommons.org/licenses/by-nc-nd/4.0/)

Analyse expérimentale du comportement thermique d'un cryorefroidisseur GM basée sur la théorie de systèmes linéaires

Mots-clés: Analyse thermique; Régulation thermique; Systèmes linéaires; Impédance thermique; Charge dynamique

1. Introduction

Technologies for closed cycle refrigeration temperatures are rapidly evolving. This, along with the increase of helium price driven by shortages rumors, has widened the fields of application for cryocoolers, both in terms of refrigerating power requirements and range of temperatures, whose minimum is now below liquid helium (Radebaugh, 2009).

However, some specific drawbacks are still to be fully solved when operating in cryocooler instead of liquid He bath. In particular, in high sensitivity experiments where the dependence of observed parameters on temperature cannot be neglected, the periodic fluctuation (Mulcahey et al., 2013) of refrigerator cold surface temperature is the most relevant. This is the case e.g. in superconductors physics research, one of the most important field of application for closed cycle cooling (Febvre et al., 2010; Lacquaniti et al., 2011).

Several attempts to reduce this problem are reported in the literature, in general based on passive damping of the fluctuations adding a thermal capacitance and a resistance along the cooling path, but implemented with several techniques (Catarino et al., 2015; Chase et al., 2010; Smith and Jennings, 2011). Since the damping is obtained with a thermal analogous of the resistance/capacitance (RC) network in electrical circuits, the time constant, given by the product of resistance times capacitance values must be significantly longer than the fluctuations period. To that aim, the most straightforward solution is partially decoupling the relevant region with an increased thermal resistance toward the cryocooler cold head. Stainless steel (Dubuisa et al., 2014) and plastic materials (Hasegawa et al., 2010) have been proposed in the literature for that purpose. The added thermal resistance obviously reduces heat transmission to the experiment part and the effectiveness of the cooler, thus it is necessary to realize a high thermal capacitance element to provide a suitable damping. The reduced

* Corresponding author.
E-mail address: a.sosso@inrim.it (A. Sosso).

https://doi.org/10.1016/j.ijrefrig.2018.04.016
0140-7007/© 2018 The Author(s). Published by Elsevier Ltd. This is an open access article under the CC BY-NC-ND license.
(http://creativecommons.org/licenses/by-nc-nd/4.0/)

Nomenclature

GM	Gifford-MacMahon
P	Applied power (W)
SMD	Surface Mount Device
DC	Direct Current
AC	Alternate Current
R_H	Heater resistor Resistance (Ω)
V_H	Heater resistor Voltage (V)
P_H	Heater resistor electrical Power modulation amplitude (W)
ω	Angular frequency (rad/s)
OFHC	Oxygen-Free High Thermal Conductivity
t_i	i-th time instant (s)
T	Temperature per unit applied power (K/W)
A_i	Weight of i-th exponential fitting function (K/W)
τ_i	Time constant of i-th exponential fitting function (s)
H	Laplace transfer function

thermal capacitance of all materials at low temperatures makes this extremely difficult. Solid state materials with this properties, e.g erbium used in cryocoolers regenerators, or even ceramic materials, can be effectively employed to increase the capacitance, however the most effective solution is provided by He inside a pot to be tightened to the cold head surface. All these solutions can effectively damp fluctuations from the few hundreds mK of bare cryocooler down to less than 10 mK and the pot damper is now available[1] in commercial products (www.cryomech.com). However, all the proposed dampers suffer from some drawbacks. In any case a longer time is required to cool down the decoupled mass (Webber and Delmas, 2015) and for the pot technique, the retrofitting of a cooler is very expensive if not at all unfeasible.

Thermal dampers described in literature are developed on an empirical basis, starting from an estimate of the effect of damper, then confirmed by an experimental evaluation of the effect. The availability of an analysis tool would be beneficial to the design of optimized passive dampers, allowing the study of more sophisticated techniques, as well as the development of active and feedback approach to fine temperature control. To that aim, a dynamical model of the thermal response of cryocooler is needed. Papers in literature on cryocoolers thermodynamic modeling are aimed at accurate simulation of the overall refrigerator behavior (Banjare et al., 2009; de Waele, 2011), in some cases including both mechanical and thermodynamic aspects (Huang and Chuang, 1996). Owing to their complexity, such models are generally studied with numerical methods (Kim et al., 2017), making it too difficult to apply linear dynamical system analysis and express the relationship between applied power and temperature by a transfer function, as customary. A transfer function approach to cryocooler modeling was presented in Bhatt et al. (2016), where it was estimated from the behavior of a closed loop operated with different feedback parameters. The authors use a black box technique with no attempt to relate the behavior to a thermophysical model.

We performed a thorough dynamic analysis of the input/output response of a GM cryocooler using different techniques for its determination, both in time and frequency domain. The integration of different approaches allowed us to overcome specific measurements difficulties, related e.g. to system noise and very slow and fast transients in the output signals. At the same time the added information provides a consistency check as well as an estimate of the measurement uncertainty.

[1] Brand names are used for identification purposes. Such use implies neither endorsement by INRiM nor assurance that the equipment is the best available.

2. Measurement method

A refrigerating machine is a complex thermal system, far from linear behavior (Huang and Chuang, 1996). However, in most practical conditions one is interested in the analysis of the behavior near a stable condition, as is the case in the design of controllers. In such cases, it is possible to assume that the parameters describing the system state are subject to limited variations. The physical model then can be linearized around the stable point and linear system theory applies.

It is known from dynamic system theory that the behavior of a linear system can be completely determined from the output to a suitable time dependent input signal. On the other side, spectral analysis is the most powerful tool in system characterization. If the input signal contains all spectral components over the range of interest, the system can be fully determined by measuring the transfer function, i.e. the complex ratio between output and input, over the frequency span (Luenberger, 1979). A step shaped input is the most widely used test signal for this purpose since it's extremely easy to generate and at the same time its spectral content includes, theoretically, all frequencies starting from zero. The step response technique is well suited to characterize thermal systems where long time constants may occur and has the advantage that the thermal step response function (or thermal transient impedance) provides some information about the thermal flow path structure (Székely and Bien, 1988).

In our experiments the thermal power was generated by a current pulse into a resistor with an hold time of several seconds to adequately observe the long term response effects. The induced temperature variations were recorded by means of a digital storage oscilloscope, then processed by analysis software to determine the number and values of time constants. To reduce the effect of voltage oscillations observed on sensors due to cryocooler temperature fluctuations, a periodic step function was generated and the responses to many steps were averaged over time. A schematic representation of the measurements performed is shown in Fig. 1.

To validate and test measurement accuracy, a second technique was used, namely the analysis of the thermal frequency response with a sinewave power stimulus spanned over the range of frequencies of interest. Sensor voltage output was then filtered and amplified by means of the lock-in technique, that allows to exclude with high selectivity frequencies not matching that of the input signal used as reference for demodulation (Meade, 1983). Measuring the lock-in amplifier output one can then determine the magnitude and the phase of the output relative to the stimulus. Since a linear system response to a sinusoidal input is sinusoidal with the same frequency (Luenberger, 1979), the lock-in technique provides a straightforward estimate of the transfer function, with very high signal to noise ratio, owing to its selectivity. The lock-in rejection is ineffective over a small range of frequencies close to the fundamental of periodic cryocooler temperature fluctuations, but this can be solved interpolating the data within the interval, with the assumption of transfer function regularity. An additional complexity in generating the power input with Joule heating resides in the square dependence of power on the electrical quantity under control, either current or voltage. In our experiments the current sent to the heating resistor was calculated for a dependence on time of the applied power given by the raised sine function: $P(t) = P\,(\sin(\omega t) + 1)$.

3. Experimental setup

Measurements were performed with a two stage Gifford–MacMahon refrigerator model Leybold Coolpower 4.2, capable of 1 W cooling power at 4.2 K and minimum temperature achievable below 3 K without thermal load. An OFHC Cu disk (coldplate) was

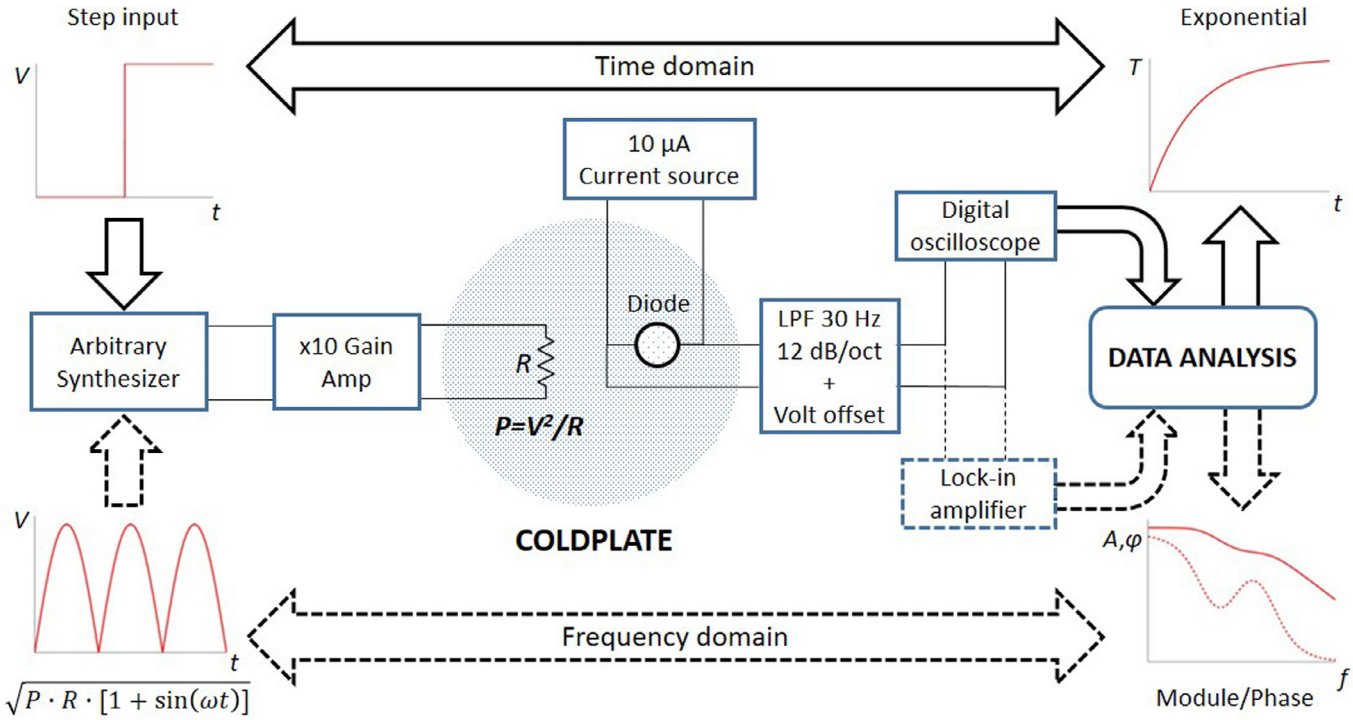

Fig. 1. Pictorial representation of the measurements performed for the dynamic characterization of the cryocooler.

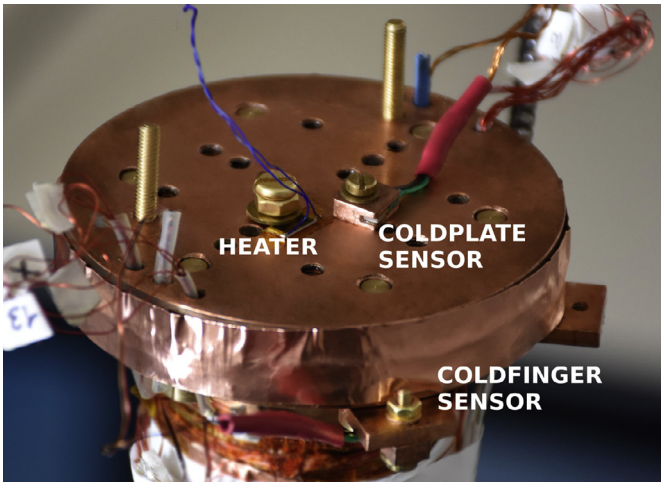

Fig. 2. Sensors and heater used in the measurement.

tightened to the coldhead surface in good thermal contact with it, to host elements for temperature monitoring and control: sensors and heaters kept in close thermal contact with brass screws. The thermal link between the disk and the cold finger was significantly improved by the insertion of grease for cryogenics applications at the interface. The heater was realized with a SMD 330 Ω nominal value (340 Ω, 4 K measured value) resistor. Two calibrated Lake Shore DT-470 diodes were used for temperature measurements.

As depicted in Fig. 2, in the setup the SMD resistor is placed at the center of the coldplate, close to one diode, separated by a 100 μm kapton tape for preventing any electrical contact between them. It will be made clear from the following discussion that the added thermal resistance due to this insulating layer has no effect on measurements results. The second diode is placed in direct thermal contact with the coldfinger, in order to assess the effectiveness of the grease thermal interface by comparing the thermal responses of the diodes. No appreciable variation was detected, hence it can be stated that coldplate and coldfinger are thermally shorted and that can be considered as a unique copper block in the following model. Either one of the sensors was then used in measurements.

Since the sampling time of instrumentation for temperature measurement and control in cryogenics is too long to detect the transients, the diodes were biased at 10 μA with high accuracy current sources and the voltage was measured after amplification and filtering of frequencies above 30 Hz. Diode voltage offset was then canceled out by summation of a constant compensation voltage. This is advantageous over AC signal coupling in that it avoids any low frequency cutoff, a fundamental requirement for the correct observation of long transients. To that aim, the diode voltage was applied at the non inverting input of a low noise differential amplifier and the compensation voltage, generated by a stable DC source (Agilent 6634B), at the inverting input. The removal of the DC signal pedestal allows to increase the amplifier gain without saturation, thus improving the signal to noise ratio. Furthermore, differential amplification guarantees high rejection to common mode electrical noise.

3.1. Time domain

In the time-domain analysis, the thermal input to the system was provided by a 10 mHz square wave voltage signal, applied across the resistor. The low-level was set to 0 V, while the high-level was limited to 8 V. It must not exceed this value in order to maintain the temperature of the system in the range under study (~4 K) and to prevent the variation of its thermal parameters. On the other side, the choice of an input level close to this limiting value allows to maximize the signal to noise ratio in measurements. The diode voltage response was sampled and averaged over about 200 samples for filtering out thermal oscillations by means of LeCroy HDO6034 digital oscilloscope. Data were then suitably post-processed in order to obtain a temperature response from a

calibration curve of the diodes obtained from a fourth order polynomial fit of manufacturers calibration points.

3.2. Frequency domain

In the frequency domain analysis, electrical power with sinusoidal dependence over time is applied by means of the heater (see Fig. 1). Linear system theory then guarantees that the output response *vs.* time is a sinewave, with the same frequency as the input stimulus. The output can be suitably measured with the lock-in technique, that assures high selectivity around the frequency defined by a reference signal, and gives both the amplitude of the sinusoidal component at that frequency and the phase with respect to the reference. Using the input signal as reference it is then possible to determine the transfer function at selected points over the frequency span of interest.

A Signal Recovery 7265 DSP lock-in Amplifier was used for the thermal system analysis in the frequency domain to provide precise module/phase measurements, using a single-tone periodical stimulus in a frequency range from 25 mHz to 10 Hz: above this value the temperature oscillations due to the input signal are so low that the cryocooler noise prevails and it is very difficult to detect the expected sinusoidal response. To reduce noise in both parameters, the demodulated signal must be averaged at least over several periods of the reference. In our case we observed that time constants of the output integrating filter five times the reference period provided optimal noise rejection. As with the previous case, for optimal signal to noise ratio the amplitude of the signal (13 V) was chosen for generating the maximum output that maintains the system within the linear range.

In this case the quadratic relationship between the value of measured electrical quantities (heater voltage or current) and electrical power, doesn't allow to use a sinewave to generate the wanted power signal. Instead, to obtain a sine-shaped power stimulus with amplitude P_H, we calculated for a set of 20 equally spaced time instants t_i inside one period the values: $V_H(i) = \sqrt{P_H R_H\,(1 + sin(\omega t_i))}$, where R_H is the heater resistance. An arbitrary function generator Agilent 33250A, was then programmed to repeatedly source, through a power amplifier at its output, the set of discrete voltages. Due to the high number of time instants t_i within a period, the sinewave is oversampled, thus can be considered as continuous. The electrical power developed in the heater is then formed by a sinewave at the same frequency, plus a constant term that is filtered out by the lock-in amplifier whose reference signal is V_H. The constant term in the applied power, with value equal to P_H, has the effect of raising the average temperature of the coldplate to 4 K. However, this small change in the operating conditions of cryocooler with respect to the step response experiments does not significantly affect its dynamic response.

4. Results

Experiments with the two setups were repeated over several days, in many cases alternating both methods to observe possible variations of the system under test over time. In the following the results of the two methods are treated separately for clarity, leaving a comparative analysis to the following section.

4.1. Step response analysis

The step-shaped input applied to the refrigerator was realized with a sudden change of the power dissipated by the SMD resistor. The amplitude of the power step provides the maximum temperature variation for best signal to noise measurements and, at the same time, a limited change of temperature dependent thermal properties (e.g. conductivity), that must be described with good approximation by constants to apply linear system theory. From the observed response, accurately described by a superposition of exponential functions (a linear system hallmark), we verified *a-posteriori* the correctness of this approach. Indeed, from a best-fit analysis of the temperature data, it has been found that the temperature response to a power step input can be accurately described by a sum of exponential decays:

$$\Delta T(t) = \sum_i A_i\,(1 - e^{-t/\tau_i}) \tag{1}$$

where A_i, τ_i are respectively the amplitude and the time constant of the *ith* decay contribution.

In principle, the number of exponential decays depends on system complexity, thus must be determined. A first test allowed us to rule out the condition $i = \{1\}$, since the observed response is not adequately fitted in this case. The results of best fits with $i = \{1, 2\}$ and $i = \{1, 2, 3\}$, normalized to a unit step, are reported in Table 1, where values are calculated from averages of the rising and falling steps of a periodic input with amplitude 7.3 V. A comparison between the fitting parameters in the two cases shows that the amplitudes tend to differ increasingly as time constants become longer. Fig. 3 shows data and exponential fitting functions in the form of equation (1), using Table 1 parameter values and (inset) the initial part of the system response to observe fast rising exponential terms.

Yet a linear system is most suitably described by the "pulse response", which can be obtained as the time derivative of the step response (Luenberger (1979). Furthermore, the system frequency response can be calculated by Laplace transforming the pulse response, a property that will be used in the following to compare the results obtained with the analysis in time and frequency domains. For any exponential term in the sum (1) the derivation gives:

$$\frac{d}{dt} A_i(1 - e^{-t/\tau_i}) = (A_i/\tau_i)\, e^{-t/\tau_i} \tag{2}$$

It follows that after derivation every term is weighted by its time constant, leading to the normalized pulse response coefficients in Table 2.

It can be seen from Table 2 that, after derivation, the amplitude values are separated by nearly an order of magnitude from each other. Being removed the integrating effect of step response that increases the amplitude of exponential contributions with longer time constants, one can observe that the amplitude values obtained for τ_1 are in good agreement, as well as for τ_2, and the amplitude for the third time constant decay can be considered negligible. The cryocooler thermal behavior then can be satisfactorily described by a linear dynamical system with a second order input-output (power-temperature) relationship.

Table 1
Parameters best fitting the normalized step response with a sum of exponential functions.

	(KW^{-1})			(s)		
	a_1	a_2	a_3	τ_1	τ_2	τ_3
2 exp	0.173	1.378	–	0.086	6.629	–
3 exp	0.160	0.910	0.526	0.053	4.861	13.014

Table 2
Coefficients of the normalized step response exponential fit time derivative.

	($KW^{-1}s^{-1}$)		
	a_1/τ_1	a_2/τ_2	a_3/τ_3
2 exp	2.012	0.205	-
3 exp	3.026	0.185	0.038

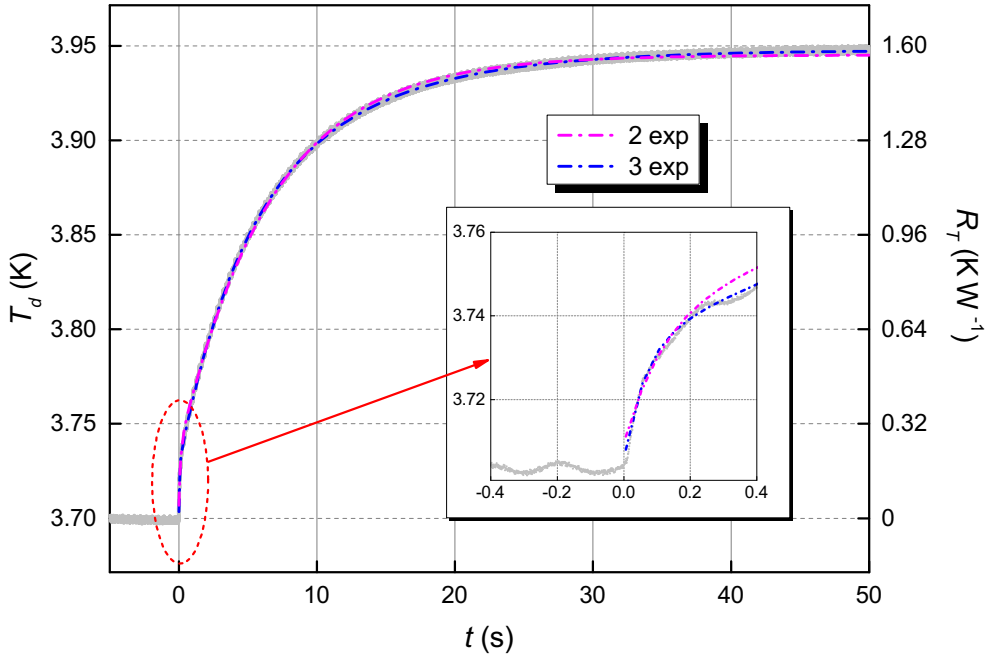

Fig. 3. Plot of the cryocooler step response measured samples and exponential fitting functions with two (magenta) and three (blue) time constants. Right y axis scale reports the incremental system response normalized to a unit step input, physically a thermal resistance (R_T).

Finally, considering the measured temperature increment $\Delta T = 0.242$ K after the system output is settled to a constant value (stationary response), we can verify our result checking it against the manufacturer specifications. From the cryocooler load-capacity map an estimate of the temperature increase per unit dissipated power can be derived around the operating point of the refrigerator. The map plot reflects the increasing difficulty of extracting heat as the temperature decreases, thus the power load decreases rapidly as the temperature approaches the minimum operating point, where eventually it goes to zero; it is then essential to estimate the value as close as possible to the operating point in consideration. From the 0.5–1 W map segment (0 W first stage heat load) we derive the equivalent incremental thermal resistance as: $\Delta T/\Delta P = 0.7/0.5 = 1.4$ K/W. Using our measurement results we obtain for the same parameter: $\Delta T/\Delta P = 0.242/0.157 = 1.54$ K/W. The two values are in good agreement, considering that the slightly higher measured value with respect to the nominal figure can be easily explained by a small degradation over time of either refrigerator performances or thermal interfaces.

4.2. Frequency response analysis

In frequency domain analysis, the sinusoidal temperature oscillations of the cryocooler produced by the applied electrical power, sine-modulated in time with constant amplitude at different frequencies, are measured. The result is then represented by the frequency response of the system, i.e. the ratio of output to input signals *vs.* frequency, whose physical dimensions are K/W, equivalent to a thermal resistance. In our experiments, both amplitude and phase with respect to the input signal were recorded for frequencies with values spaced by approximately one octave from each other (i.e. equispaced in the logarithmic plot).

Owing to the difficulties in avoiding the offset in phase measurements, it was removed by correcting the readings to obtain zero degrees at lowest frequencies, as required by theory. Indeed, considering the observed time constants, the 25 mHz minimum frequency used in the analysis is so low that the cryocooler dynamical response is the same as with a constant input. This frequency response point can then be compared to the value previously obtained for the stationary response and we obtain: $(\Delta T/\Delta P)_{step} = 1.63$ K/W, $(\Delta T/\Delta P)_{freq} = 1.70$ K/W, a good agreement considering the accuracy of oscilloscope and lock-in amplifier, slightly better than percent.

As shown in Fig. 1, to reduce noise, mostly from mains, at the input of lock-in amplifier the signal was pre-filtered by the low pass section of the differential amplifier (30 Hz, 12 dB/octave). The filter has a limited, but not negligible, effect at the frequencies of interest and its contribution (Fig. 4) must be removed from the samples with higher frequencies, to proper estimate the behavior of the cryocooler alone.

The frequency response, corrected after removal of the spurious filter effects, can then be fitted using system analysis software (Enterprises, 2012) to estimate the poles and zero of the generating transfer function. We obtain finally that the dynamic behaviour of the cryocooler can be represented, using Laplace form, by the function:

$$H(s) = \frac{1.7\ (1 + s/1.76)}{(1 + s/0.153)\ (1 + s/11.9)} \tag{3}$$

In other words, the cryocooler behaves with good approximation as a second order system with zero at: $z = 280$ mHz and poles at: $p_1 = 24$ mHz and $p_2 = 1.7$ Hz. We notice that the zero is located between the two function poles; this is not just an accidental fact, rather it follows form the formal equivalence between a thermal system and an electrical network containing only resistors and capacitors, that holds when temperature and thermal power are replaced by voltage and current in the system dynamic equations (Lienhard and Lienhard, 2015). This property allows the application to thermal systems of theories developed for electrical circuits (Kuo, 1966). Specifically, in our case the temperature is measured in the same location as the power injection, thus their ratio is equivalent to an electrical impedance (and, accordingly, is frequently named thermal impedance). From that we can derive the following properties (Kuo, 1966): zeros and poles are alternating, starting with a pole, all real and negative; the pole residuals are

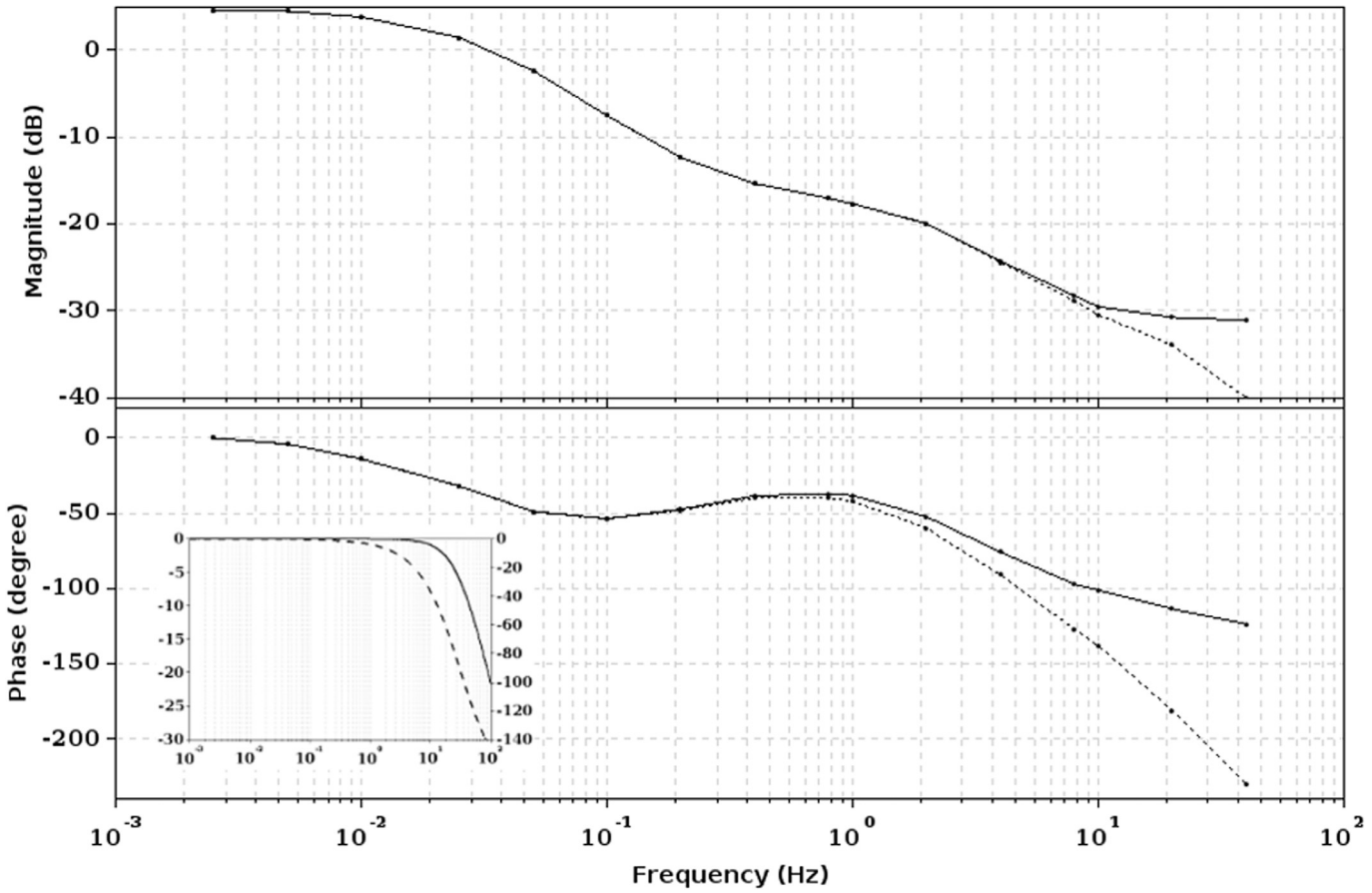

Fig. 4. Magnitude and phase plots of the raw cryocooler frequency response (dotted line, marks indicate data values) and (continuous line) frequency response corrected to compensate pre-filter. In the inset, the calculated frequency response of the pre-filter (magnitude, solid line, left axis; phase, dashed line, right axis).

all positive. The properties can be easily verified with the transfer function (3) confirming the consistence of our lumped heat transfer model approach to describe the dynamic thermal properties of a cryocooler.

The accuracy of the fit provided by (3) is clearly verifiable in Fig. 5, however one can notice in the phase plot that measured data and fitted values differ by a constant offset. This can be explained easily considering the previous discussion on the difficulties in the determination of the absolute phase difference, that was solved, at first, setting to zero the phase of the lowest frequency data point. Eventually, the residual offset shows that the assumption was not exact and, for consistency, the phase of the transfer function must approach zero at lower frequencies than initially guessed. A second discrepancy between fit and data is noticed in the higher frequency range. In this case, the motivation is to be found in the high input-output attenuation (−30 dB with respect to the response to a constant input) and, consequently, very low measured signals. Owing to this, data at frequencies above $\approx$5 Hz are unreliable and hidden by a noise floor distinctly observable over this frequency range in the magnitude plot.

5. Comparative analysis of time and frequency domain approaches

Results obtained with either time or frequency analysis of the system response are tied by relationships that are well known from theory (Luenberger, 1979), thus they can be derived from each other. It doesn't mean, however, that either one of these approaches can be chosen arbitrarily. First of all, the measurement setup and instruments needed are not the same in both cases and this affects the choice, besides trivial considerations of availability in the lab. The lock-in technique, for instance, is particularly effective in noise rejection, allowing to reliably filter the interference from mains and, in the specific instance of cryocooler measurements, the temperature fluctuations from the mechanical cooling cycle that dominates over the signal under observation. To obtain an equivalent filtering, lengthy averaging over several hours were required in step response measurements. On the other side, step response measurements are easier to perform, require widely available instrumentation like a digital oscilloscope and may be sufficient in some cases. The choice of the proper solution then follows from the requirements on data accuracy, to be evaluated on a case to case basis. A rigorous estimate of the uncertainty would require a detailed analysis of data statistics and model approximations (JCGM, 2008), however the availability of results obtained from two different method allows to derive a first evaluation of the uncertainty by their direct comparison.

To that aim, we start from the transfer function obtained in frequency domain (3) and derive the pulse response by inverse Laplace transform. This mathematical operation can be easy performed with our simple rational expression that can be found tabulated in many books (see for instance: Outlines:, 1965). We then obtained a weighted sum of two exponential functions, with time constants that equal the reciprocal of the two poles' angular frequencies: $\tau_1' = 1/11.9 = 0.084\,\text{s}$, $\tau_2' = 1/0.153 = 6.54\,\text{s}$, with both values in satisfactory agreement with those obtained in time domain (Table 1). The weighting coefficients can be expressed in

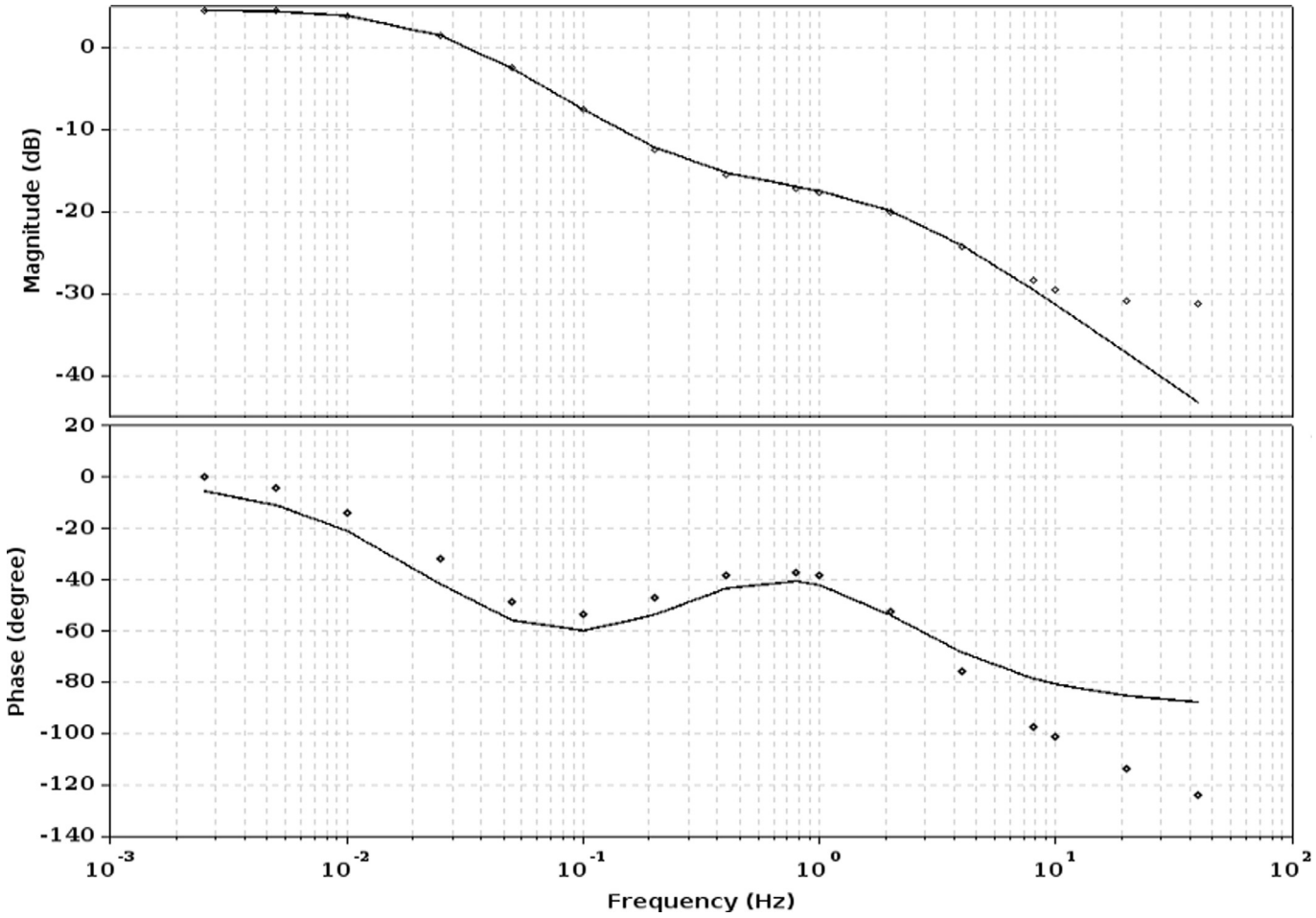

Fig. 5. Magnitude and phase plots of the measured frequency response data (diamond marks) and fitted function (3).

terms of the transfer function zero:

$$1.76\ \frac{1/\tau_1' - z}{1/\tau_1' - 1/\tau_2'} = 1.52$$

$$1.76\ \frac{z - 1/\tau_2'}{1/\tau_1' - 1/\tau_2'} = 0.24$$

where the leading coefficient is calculated as: $\lim_{s\to\infty} H(s)$ (initial value theorem). These values are quite different from figures in Table 2. Since numerical calculations show that the transfer function fit is very sensitive to changes in the zero placement, a different value cannot be considered to provide closer results. Rather we notice that, from the scattering of data in step response measurements, the parameters in Table 2 are subject to an experimental standard deviation of about 40%, that largely explains the discrepancies. Finally, we can notice that the differences between the results in time and frequency for the stationary thermal resistance are largely motivated by the combined uncertainty of the two measurement systems.

6. Conclusions

A detailed study of the thermal properties of a cryocooler in non stationary load conditions has been carried out by means of dynamic linear system theory. Using both time and frequency domain analysis we were able to derive the system parameters with suitable accuracy, providing cross validation of our results and a first estimate of their uncertainty. Furthermore, the self consistency of both results demonstrates that a lumped model provides an adequate representation of the dynamic thermal properties of a cryocooler, with interesting applications to the temperature control of the cooler, e.g. in the simulation and design of thermal dampers.

Besides, our unsuccessful first attempts to explain with a lumped parameters model some features like the relevant thermal capacitance at the coldplate suggest some contribution from heat exchanges with the coolant. Linear dynamic analysis of cryocoolers can then be a useful tool to investigate their thermodynamic properties.

Acknowledgment

The authors gratefully acknowledge E. Monticone who contributed with useful suggestions and discussions throughout the development of this work, and D. Serazio for designing and manufacturing several parts of the cryogenic system.

This work was co-funded by the European Union within the European Metrology Programme for Innovation and Research (EMPIR) joint research project 15SIB04 QuADC. The EMPIR initiative is co-funded by the European Unions Horizon 2020 research and innovation programme and the EMPIR Participating States.

Supplementary material

Supplementary material associated with this article can be found, in the online version, at doi:10.1016/j.ijrefrig.2018.04.016.

References

Banjare, Y.P., Sahoo, R.K., Sarangi, S.K., 2009. CFD simulation of a Gifford–MacMahon type pulse tube refrigerator. Int. J. Therm. Sci. 48 (12), 2280–2287. doi:10.1016/j.ijthermalsci.2009.04.013.

Bhatt, J. H., Bhave, S. J., Metha, M. M., Upadhay, N. (2016). Derivation of transfer function model based on miniaturized cryocooler behavior. Proceedings of INROADS International Conference IAET-2016 Special Issue. doi:10.5958/2277-4912.2016.00063.1.

Catarino, I., Martins, D., Sudiwala, R., 2015. Materials for damping the PTC-induced thermal fluctuations of the cold-head. Proceedings of IOP Conference Series: Maths Science and Engineering 102 (1), 012014.

Chase, M., Woidtke, A., Mauritsen, L., Henslee, I., Sellin, P. B., Merkel, K. 2010. U.S. Patent 8516834 b2.

Dubuisa, G., Heb, X., Bozovic, I., 2014. Sub-Millikelvin stabilization of a closed cycle cryocooler. Rev. Sci. Instrum. 85. doi:10.1063/1.4896049. 103902

Enterprises, S. 2012. Scilab: free and open source software for numerical computation. http://www.scilab.org.

Febvre, P., Bouis, D., De Leo, N., Fretto, M., Sosso, A., Lacquaniti, V. 2010. Electrical parameters of niobium-based overdamped superconductor-normal metal-insulator-superconductor Josephson junctions for digital applications. J. Appl. Phys., 107(10). 103927.

Hasegawa, Y., Nakamura, D., Murata, M., Yamamoto, H., Komine, T., 2010. High-precision temperature control and stabilization using a cryocooler. Rev. Sci. Instrum. 81 (094901). doi:10.1063/1.3484192.

Huang, B.J., Chuang, M.D., 1996. System design of orifice pulse-tube refrigerator using linear flow network analysis. Cryogenics 36 (11). doi:10.1016/S0011-2275(96)00064-1. 889

JCGM 2008. 100:2008, GUM 1995 with minor corrections – evaluation of measurement data – guide to the expression of uncertainty in measurement, first edition. Corrected version 2010.

Kim, K., Zhi, X., Qiu, L., Nie, H., Wang, J., 2017. Numerical analysis of different valve effects on the cooling performance of a two-stage GM type pulse tube cryocooler. Int. J. Refrig. 77, 1–10. doi:10.1016/j.ijrefrig.2017.02.024.

Kuo, F.F., 1966. Network Analysis Synthesis, 2nd ed. Wiley Toppan.

Lacquaniti, V., De Leo, N., Fretto, M., Sosso, A., Mueller, F., Kohlmann, J. 2011. 1 V programmable voltage standards based on SNIS Josephson junction series arrays. Supercond. Sci. Technol., 24(4). 045004.

Lienhard J. H., I.V., Lienhard J. H., V., 2015. A Heat Transfer Textbook. Phlogiston Press.

Luenberger, D.G., 1979. Introduction to Dynamic Systems Theory, Models, and Applications. John Wiley & Sons.

Meade, M. L. 1983. Lock-in amplifiers: principles and applications, London : P. Peregrinus on behalf of the Institution of Electrical Engineers, 1983 INSPEC/IEE, ISBN 10: 090604894X, ISBN 13: 9780906048948.

Mulcahey, T.I., Pathak, M.G., Ghiaasiaan, S.M., 2013. The effect of flow pulsation on drag and heat transfer in an array of heated square cylinders. Int. J. Therm. Sci. 64, 105–120. doi:10.1016/j.ijthermalsci.2012.08.017.

Outlines:, S., 1965. Laplace Transforms. McGraw-Hill Education. ISBN: 978–0070602311.

Radebaugh, R., 2009. Cryocoolers: the state of the art and recent developments. J. Phys.: Cond. Mat. 21 (16), 164219. IOP Publishing.

Smith, M. J., Jennings, J. 2011. Proceedings of the ASME 2011 International Mechanical Engineering Congress, Denver, Colorado, 1117 November,678.

Székely, V., Bien, T.V., 1988. Fine structure of heat flow path in semiconductor devices: a measurement and identification method. Solid-State Electron. 31 (9), 1363–1368.

de Waele, A.T.A.M., 2011. Basic operation of cryocoolers and related thermal machines. J. Low Temp. Phys. 164 (179). doi:10.1007/s10909-011-0373-x.

Webber, R.J., Delmas, J., 2015. Cool-down acceleration of GM cryocoolers with thermal oscillations passively damped by helium. IOP Conf. Ser.: Mat. Sci. Eng. 101 (1), 012137.

www.cryomech.com.